AUTOMATED MODULAR TRANSACTION TERMINAL WITH COLOR TOUCH SCREEN (AMTT CS) SERVICE MANUAL

Work Order # 7960050

SERIAL #_____

RYKO **Manufacturing Co. • 11600 N. W. 54th Avenue • Grimes, IA 50111 • 515-986-3700**

:

THIS MANUAL CONTAINS SETUP, TESTING, OPERATION AND MAINTENANCE PROCEDURES FOR THE *RYKO* AUTOMATED MODULAR TRANSACTION TERMINAL WITH COLOR SCREEN WHEN INSTALLED WITH THE CODE-A-WASH IV MANAGEMENT SYSTEM.

ATTENTION SERVICE PERSONNEL! DISCUSS ALL AREAS OF OPERATION WITH THE OWNER/OPERATOR WHEN SETUP AND TESTING OF THE AUTOMATED MODULAR TRANSACTION TERMINAL IS COMPLETE.

PAY PARTICULAR ATTENTION TO INFORMATION PROVIDED AT "FOR YOUR SAFETY" IN THIS MANUAL AND TO CAUTION AND WARNING NOTES THROUGHOUT THE TEXT AND DRAWINGS.

CONTENTS

GENERAL INFORMATION 1
INTRODUCTION 1
STANDARD FEATURES 1
OPTIONAL FEATURES 1
FOR YOUR SAFETY 2
REQUIREMENTS AND SPECIFICATIONS 3
ELECTRICAL 3
EQUIPMENT WEIGHT 3
REGULATORY COMPLIANCE 3
TERMS AND DEFINITIONS 4
TERMS 4
PRE-OPERATION SETUP AND PROGRAMMING 6
SETUP GUIDELINES 6
REQUIRED SETUP PROGRAMMING 6
NETWORK PRE-OPERATION SETUP 6
SETTING NODE SWITCHES 6
INITIAL START-UP AND TESTING - NETWORK 6
AMTT CS COINBOX TESTING 8
PLC TESTING 8
MODEM TESTING 8
NETWORK SYSTEM OPERATION AND TROUBLE SHOOTING 8
NETWORK ERROR MESSAGES 8
TYPICAL DISPLAYS - LOST COMMUNICATION CONDITION 8
ALTERNATE TESTING PROCEDURES 9
CHECKING AMTT CS OPERATION 9
NETWORK TROUBLESHOOTING FLOWCHART 11
TOUCH-SCREEN OPERATION 12
USING THE TOUCH-SCREEN FOR SETUPS AND DIAGNOSTICS 12
THE BASICS 12
SYSTEM MENUS 15
ACCESSING THE MENUS 15
USER LOGIN 15
THE MAIN MENU 16
REPORTS 17
SYSTEM SETUPS MENU 20
SETUP MENU REQUIREMENTS KEY 20
GENERAL SETUP 21
CARWASH OPTIONS 27
CARWASH OPTIONS 28
CARD PROCESSING SETUPS 29
DATE/TIME 30
WASH SETS 30
WASH PACKAGES 33

SITE INFORMATION *35*
PASSCODES *36*
CUSTOM MESSAGES *36*
DIAGNOSTICS MENU 38
SENSORS / RELAYS *38*
RYKONET DIAGNOSTICS *39*
COIN MECHANISMS *39*
BILL ACCEPTOR *40*
COIN HOPPER *40*
CARD READER *41*
PRINTER *41*
PUSH FOR ASSISTANCE *42*
CD-R / RW DRIVE *42*
AUDIO *42*
USERS 43
OPERATION 45
DESCRIPTION OF OPERATION 45
BASIC ORDER OF OPERATION *45*
CARD READER OPTION 51
SCI CARD READERS *51*
PAN CARD READERS *52*
CARD READER CLEANING *52*
THE CARD READER AND CREDIT CARDS 52
CUSTOMER OPERATION *52*
CREDIT CHARGE SERVER *53*
THE CARD READER AND WASH CLUB CARDS 53
THE MANAGER'S CARD *54*
MANAGER'S MENU *54*
CHANGE HOPPER OPTION 57
CHANGE HOPPER PREPARATION *57*
CHANGE HOPPER REMOVAL/INSTALLATION *57*
BILL ACCEPTOR OPTION 58
REMOVING MONEY FROM THE BILL ACCEPTOR *58*
BILL ACCEPTOR MAINTENANCE *59*
COIN SWITCH OPTION 59
INTERCOM OPTION 59
MAINTENANCE 61
MAINTENANCE SCHEDULE 61
DAILY MAINTENANCE *61*
WEEKLY MAINTENANCE *61*
MONTHLY MAINTENANCE *61*
READ THIS BEFORE REMOVING POWER! 62
SECURITY KEYS 62
CASH REMOVAL 63
TOUCH-SCREEN MAINTENANCE & SERVICE 63
CLEANING THE SCREEN *63*
INITIALIZING & SETTING UP THE TOUCH SCREEN *63*
CIRCULATING FAN FILTER CLEANING 63
CIRCULATING FAN FILTER AND GUARD REPLACEMENT PARTS *63*
INSTALLING SOFTWARE UPGRADES 64
CREATING A CUSTOM WELCOME/INSTRUCTION VIDEO 65
REQUIREMENTS AND HOW-TO NOTES *65*
PHOTOEYE CLEANING AND ADJUSTMENT 66
WARRANTY INFORMATION 68
WARRANTY PARTS RETURN 68

DRAWINGS

Maintenance-Diagnostic Instructions, Mars (MEI) 2000 Series Bill Acceptor 25571-000
Coin Mechanism Instructions, Secure Coin Option 25732-001
Electrical Schematic, AMTT with Color Screen 25920-000
ICVerify Setup Instructions 26168-001
Credit Charge Server Configuration Setup Instructions 26170-000
Instructions, Touch-Screen Initializing 26205-000

GENERAL INFORMATION

INTRODUCTION

The Automatic Modular Transaction Terminal with Color Screen (AMTT CS) is a windows based coinbox-device designed for use by car wash operators and their customers. With a sturdy and attractive casement that may be mounted on a pedestal or wall, the AMTT CS presents a carwash menu on an easy-to-use interactive color touch-screen display and accepts a customer's pre-purchased wash code, coins, bills, credit cards, or wash club cards to arm the car wash equipment. The AMTT CS also offers a variety of features specifically created for the car wash owner/operator. The touch-screen display allows the operator quick access to convenient menu screens pertaining to equipment and security settings, diagnostics information, and printable reports. In addition to configuring the AMTT CS to operate with the wash equipment, programmable settings also allow the operator to create and store special promotional menus and pricing that is easy to access and implement as desired.

STANDARD FEATURES

Full Color Interactive Touch-Screen
Speaker
Photoelectric Vehicle Detection
MSWindows Software
Prerecorded Welcome Video
Keyed and Programmable Security
Cooling and Heating

OPTIONAL FEATURES

Bill Acceptor Option
Coin Mechanism Option
Coin Hopper Option
Intercom Option
Card Reader Option
Printer Option
Door Lock Option
Bill Acceptor Lock Option
Change Hopper Lock Option

FOR YOUR SAFETY

- **Read all instructions and consult pertinent drawings before proceeding with installation or service.**

CAUTION: DISCONNECT ALL POWER SUPPLIES TO THE EQUIPMENT BEFORE PERFORMING SERVICE.

- ***Do not*** stand or climb on this equipment at any time for any reason.

- **The Automated Modular Transaction Terminal coin box is designed to be operated on a ground fault circuit interrupter (GFCI) circuit only!! *Do not* connect this device to a normal power line.**

- Pay particular attention to "Caution" and/or "Warning" decals that may be located on the AMTT Color Screen and associated equipment to avoid accidental injury or damage to the equipment. Replace the decals if they become damaged or illegible.

WARNING!

BEFORE INTERRUPTING POWER TO THE AMTT CS, SHUT DOWN PROCEDURES MUST BE COMPLETED TO ENSURE THE OPERATION PROGRAMS ARE PROTECTED. REMOVING POWER BEFORE COMPLETING SHUTDOWN PROCEDURES MAY CAUSE EQUIPMENT TO MALFUNCTION OR FAIL TO RESTART.

REQUIREMENTS AND SPECIFICATIONS

ELECTRICAL

110V Dedicated Circuit GFCI*

*Ground Fault Circuit Interrupter

IMPORTANT: THE AMTT CS CONTAINS ELECTROSTATIC SENSITIVE DEVICES. WEAR AN ELECTRIC-STATIC DISCHARGE GROUND WRIST STRAP WHEN SERVICING INTERNAL COMPONENTS TO PREVENT DAMAGE TO EQUIPMENT.

EQUIPMENT WEIGHT

Head: 155 lb.
Pedestal: 35 lb.

REGULATORY COMPLIANCE

The Automated Modular Transaction Terminal with Color Screen (AMTT CS) complies with 47CFR FCC Part 15B Class A requirements.

This equipment has been tested and found to comply with the limits for a Class A digital device, pursuant to Part 15 of the FCC Rules. These limits are designed to provide reasonable protection against harmful interference when the equipment is operated in a commercial environment. This equipment generates, uses, and can radiate radio frequency energy and, if not installed and used in accordance with the instruction manual, may cause harmful interference to radio communications. Operation of this equipment in a residential area is likely to cause harmful interference in which case the user will be required to correct the interference at his own expense.

- - - - - - -- - - - - - - - - - - -- - -

This Class [*] digital apparatus complies with Canadian ICES-003.

TERMS AND DEFINITIONS

TERMS

ACTIVATION DEVICE
An activation device is the air hose, switch, or other device that provides a signal to the Programmable Logic Controller (PLC) that a vehicle has entered the wash bay and is positioned and ready for the wash to begin.

ARMED
The wash equipment has been prepared for activation by its arming device and is ready to cycle when the activation device provides input information to the Programmable Logic Controller (PLC). This means that a payment option (money, pre-purchased code, credit card, or wash club card) has been entered and accepted at the coinbox device at the bay entrance and that the Programmable Logic Controller is awaiting a signal from an activation device that the vehicle is in place to begin the wash.

ARMING DEVICE
An arming device is coinbox type equipment installed at the entrance of the bay for use by the customer to purchase wash services. The AMTT CS is an arming device.

NETWORK
The RYKONet network system connects a wash location's vehicle wash devices such as the Code-A-Wash console in the office or kiosk, the wash equipment in the bay, and the coin box at the bay entrance through a single pair of network wires. This connection allows the devices to communicate with one another to ensure the cooperative operation of the wash system components and processes.

CARD READER
The Card Reader is an optional device installed on the AMTT CS that reads the information stored on a credit card or wash club card and, working with appropriate software, allows acceptance of the cards by the AMTT CS to purchase car wash services.

CODE-A-WASH CONSOLE
The Code-A-Wash console is a desktop console that may be installed in a kiosk or office for an attendant to generate wash code tickets for use at an AMTT CS or other *RYKO* coinbox. It also serves as a main component in network communication. The Code-A-Wash console display shows system messages and allows the attendant to monitor equipment communication and operation.

CREDIT CHARGE SERVER
The Credit Charge Server on the AMTT CS or another device on site manages credit transactions and works in cooperation with the ICVerify program to authorize credit purchases.

EP MANAGER
EP Manager manages credit transactions and works in cooperation with the ICVerify program to authorize credit purchases.

EPI SERVER
The EPI Server manages where credit or wash card information is sent in order to get validated and/or authorized.

IC VERIFY

ICVerify is the credit authorization programming software and system that is used to communicate with financial institutions to authorize credit purchases.

NODES
A node is any device connected (wired) to the network. There are two basic types of connection points for nodes: the green box and the SBX circuit board.

PROGRAMMABLE LOGIC CONTROLLER (PLC)
The Programmable Logic Controller is a self-contained, computerized controller that is located in the Electrical Control Panel of automatic car wash equipment. It transmits, receives, and monitors signals from the wash system components and communicates with other devices on the RykoNet Network. The controller serves as the main control system for wash equipment operations and contains the programming facilities for altering and adjusting wash operation procedures.

WASH PACKAGE
A Wash Package combines several wash functions (e.g., Foam Bath, Rinse, Hot Wax, Dry) under a single name and price for purchase on the customer menu.

WASH PACKAGE SET
A Wash Package Set is a programmed grouping of four wash packages that may be presented to the customer on the AMTT CS' carwash menu. All wash names, pricing and wash functions are included in the programming. Multiple wash package sets may be stored in the AMTT CS' memory and one set may be activated (enabled) at a time for display.

PRE-OPERATION SETUP AND PROGRAMMING

SETUP GUIDELINES

REQUIRED SETUP PROGRAMMING

Due to the variety of options offered for installation on the AMTT CS, it will be necessary to select the appropriate settings for the equipment installed. To determine what setup programming is required for a wash location, refer to the **System Setups Menu** information provided in this manual.

NETWORK PRE-OPERATION SETUP

Following the installation of equipment, some of the procedures below are or may be necessary for proper operation of the network system.

SETTING NODE SWITCHES

Since the network may connect up to eight different coin boxes with eight different vehicle washes, it is necessary to distinguish which node serves which coin box and wash. Each green box node has a rotary selector switch that sets the unit to communicate with a specific wash unit.

On the green box, near the power indicator light, is a recessed rotary switch. The rotary selector switch consists of an arrow indictor and a dial with numbers 0 through 9. Using a very small screwdriver, turn the arrow indicator to point at the desired node number. **IMPORTANT:** If there is only one wash and one coin box on the network, set the rotary switch to **1**. If set for more than one wash when only one wash is connected, the Code-A-Wash IV console will display a network error message to indicate that it cannot locate the second carwash PLC node.

It is imperative that the rotary switch on each node is set correctly so that coinbox #1 talks to car wash #1, coin box #2 talks to car wash #2, etc.

CODE-A-WASH IV CONSOLE

The Code-A-Wash IV console should be set for network operation. Refer to Maintenance Mode information in the Code-A-Wash IV Service Manual.

INITIAL START-UP AND TESTING - NETWORK

After ensuring that all network wiring is correctly installed, turn on the power to check network operation.

1. As power is applied to each of the green boxes (PLC or Modem nodes), the green light on the box should illuminate to indicate that the unit has power.

2. As power is applied to each of the green box nodes, watch the red light carefully. The red light on each of the green box nodes should blink only once to indicate that the unit has gone through its startup initialization program and is operational. Then the light should go out. If the red light does not follow this procedure there is most likely an error condition.

3. When power to the Code-A-Wash IV console is turned on, the console searches for the network circuit board. It may be necessary to enter the network setting in the Code-A-Wash IV Maintenance Mode before this can occur. Refer to the Code-A-Wash IV Service Manual for details pertaining to network operation and setup.

AMTT CS COINBOX TESTING

If the installation incorporates an AMTT CS coin box, the Start-Up Test Procedure provides some of the required testing. For additional information regarding operation and troubleshooting pertaining to the AMTT CS refer to **Network System Operation and Troubleshooting**, Checking AMTT CS Operation.

PLC TESTING

If the PLC (Programmable Logic Controller) node is communicating properly with both the Code-A-Wash IV console and the PLC, it is possible to read data from the PLC on the Code-A-Wash IV console. As discussed in the Code-A-Wash IV Service Manual, it is possible to print reports from the PLC pertaining to Carwash Totals, Carwash Setups, Timer Settings and 4-digit Diagnostic Codes. Printing a report is a good test of the communication between the console and the PLC.

These reports are "real-time generated". This means that each line item on the report (other than the date and time) is a separate message derived and sent from the PLC exactly at the time it was requested. The date and time alone are generated by the Code-A-Wash IV console.

MODEM TESTING

Modem tests are conducted during the DC Manager testing procedures or through normal paging procedures.

NETWORK SYSTEM OPERATION AND TROUBLE SHOOTING

NETWORK ERROR MESSAGES

The Code-A-Wash IV console display provides the main diagnostic tool for the network system. The display alerts the operator of communication problems with messages. Each device connected to the network sends its own "I'm up and running" broadcast message across the network periodically. If the Code-A-Wash IV console does not hear this broadcast message from a particular device it presents a lost communication condition message on the display screen.

NOTE: If there is more than one message to the console, the messages will cycle one after another every few seconds. The messages will disappear one by one as the communications loss problems are resolved.. When no messages remain the system is functional.

TYPICAL DISPLAYS - LOST COMMUNICATION CONDITION

Example: **"---------NETWORK ERROR PLC"**

Example: **"---------NETWORK ERROR MOD"**

Example **"---------NETWORK ERROR CBX"** (systems with AMTT coin box only)

When one of the messages above appears on the display, the Code-A-Wash IV console cannot communicate with the device listed.

Check the following:

1. Is the node power light on to indicate power is present?
2. Is the shielded cable wiring connected properly?

Another message that may appear on the display is

"---------CARWASH 02 OFFLINE

Note: A number may or may not appear before the word "OFFLINE" depending on the Code-A-Wash IV software revision.

This message indicates that there is a communication loss between the green box PLC node and the PLC itself. The green box PLC node is communicating with the Code-A-Wash IV console, but *not* with the PLC.

Check the following:
1. Is the ribbon cable leading from the PLC node to the PLC plugged in?
2. Is the PLC powered on?
3. Is the PLC running a program?

ALTERNATE TESTING PROCEDURES

When experiencing difficulty diagnosing exactly where the trouble is, it is possible to break the system down into smaller components for troubleshooting. If another network capable Code-A-Wash IV console is available, this console can be used for diagnostic purposes. If not, the main console can be removed from the office or kiosk for testing.

Parts Needed:

Code-A-Wash IV console (set up for network)
Pin D-subminiature cable and connector as supplied with the console
A long extension cord (as needed to power the console)

1. Disconnect the network wires from each node.
2. Connect the black and brown wires leading from the back of the console to the terminals for numbers 701 and 702 leading into each node.
3. Verify one by one that each individual node is operating properly. In this way it is possible to eliminate all possible field wiring problems and interactions between nodes. If the nodes all work individually, the problem is located in the cable wiring. Cable wiring problems can be diagnosed using an ohmmeter, and checking for earth grounds, bad connections to terminals, broken wires, etc.

CHECKING AMTT CS OPERATION

The following message appears on the AMTT CS display if the console is reset or if the carwash control power is off.

"SORRY, THE CARWASH IS
TEMPORARILY CLOSED"

When an AMTT CS coinbox is installed with the network, it periodically broadcasts messages indicating "I'm here and operational" and listens for the Code-A-Wash IV console's broadcast of the same message. If the AMTT CS does *not* hear the broadcast message from the Code-A-Wash IV console it assumes that communication with the Code-A-Wash console is not possible. Because the AMTT CS needs the Code-A-Wash IV console to check codes and, in some cases, send signals to a wash equipment interface, the AMTT CS screen displays the car wash closed message.

If this message appears on the AMTT CS display *and* the Code-A-Wash IV console displays a network error from the "CBX", a communication loss between the console and the AMTT CS coinbox has

occurred.

NETWORK TROUBLESHOOTING FLOWCHART

The troubleshooting flowchart below applies to typical RYKONet systems. **NOTE:** Systems vary and may not contain all of the components listed. If, after testing as described above and following the flowchart, the problem is still undiagnosed or unresolved, contact the *RYKO* Customer Service Department. **Please have the test results available when contacting the RYKO Customer Service Technical Advisor.**

TOUCH-SCREEN OPERATION

USING THE TOUCH-SCREEN FOR SETUPS AND DIAGNOSTICS

The AMTT Color Screen is designed to operate by light touches on the display screen. The AMTT Color Screen allows the operator to set operations for both the inner workings of the AMTT and the display used by the customer. Setup screens in a clearly laid out format allow the operator to choose and enable or disable options as desired for operation and to input equipment settings best suited for their location. Diagnostic screens are also accessible for reviewing operation information and performing equipment tests. The operator can also set system security by designating user identities with passcodes. In this way equipment settings are protected from accidental override and site personnel can be assigned appropriate levels of access to system information.

THE BASICS

Some AMTT CS touch-screens are designed to provide information for viewing only. Others, such as system setups, require input or selections. The system uses various methods of presenting information used to set or diagnose equipment operation. These methods are described below.

TABS

When more than one screen is necessary to view all information about a particular topic, the screen may be presented in a "tab" format.. At the top of the screen in the Screen Example 1 (right) are what appear to be tabs similar to those on folders in a filing cabinet. By touching a tab, you may open a "folder" to display the information in that folder on the screen. In Screen Example 1, the Card Reader folder is displayed. Note that the Card Reader tab is highlighted and a different color from the other tabs. When another folder tab is touched, for example the RykoNet tab, the highlighting switches to the new tab and the display changes to show the information in that folder. On some screens the selected folder tab does not highlight. Instead the tab appears to move in front of the other tabs. Either the closest folder tab or the highlighted folder tab indicates which folder is being displayed on the screen.

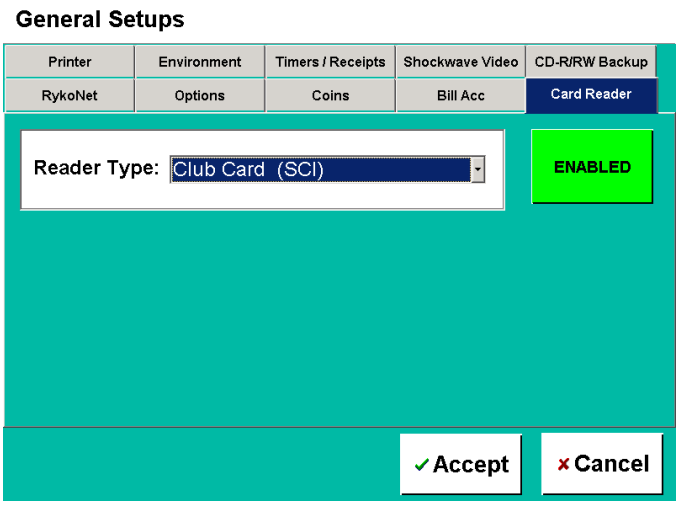

Screen Example 1

BUTTONS

Menu topics presented on the screen in box-type "buttons" (see Screen Example 2) are touch sensitive. Touch the desired button to open additional screens available for the topic.

Screen Example 2

Three touch-buttons are available on setup screens where setting selections may be entered. These are the **Accept**, and the **Cancel** buttons (See Screen Example 1).

- Touch the **Accept** button to accept the setup selections as they appear on each setup screen. Once selections are accepted, the equipment will respond immediately to the new settings. Refer to Selection Boxes information.

- Touch the **Cancel** button to exit a setup screen without accepting any new selection changes that may appear on the screen. Previously selected and accepted settings remain enabled. This button allows you to view setup alternatives without disturbing settings that are currently working satisfactorily.

Additional buttons may also appear on a setup screen that may alter how the entered selections are affected or how equipment operation is affected. For example, in Screen Example 1, note that the **ENABLED** button appears to be highlighted. This means the selections have been accepted for equipment settings. Pressing the ENABLED button again will dim the highlight and disable the setting.

An **EXIT** button is provided on screens requiring no selections or settings. Press EXIT to escape the current screen and return to the previous menu.

Occasionally additional buttons not mentioned here have been added to screens to assist you. These buttons and their purpose(s) are described in the appropriate menu information.

SELECTION BOXES

On several of the setup screens you will notice selection boxes similar to the illustrations below. These selection boxes contain a list of the setup selections that may be used in this field.

IMPORTANT! ALL OF THE SELECTIONS PROVIDED IN THE SELECTION BOXES *ARE NOT* **APPROPRIATE FOR EVERY LOCATION OR ALL EQUIPMENT. CHOOSING A SELECTION THAT IS INAPPROPRIATE FOR THE EQUIPMENT OR OPTIONS INSTALLED OR THAT IS NOT COMPATIBLE WITH OTHER SETUP SELECTIONS CAN CAUSE EQUIPMENT TO MALFUNCTION. FOR MORE DETAILED INFORMATION, REFER TO THE SYSTEM SETUPS AND DIAGNOSTICS MENU INFORMATION IN THIS MANUAL. IF YOU NEED ASSISTANCE, CONTACT YOUR LOCAL SERVICE CENTER.**

Touching the down-arrow to the right of a selection box pane presents a drop-down menu containing the available setup selections. When you touch a selection it appears in the selection box pane until another selection is chosen.

Selection Box

Whatever selection appears in the selection box pane is the setting that is enabled when the settings on the screen are accepted by touching the **Accept** button.

Other selection boxes appear as shown at right. Touch the up-arrow to increase or the down-arrow to decrease the setting.

Selection Box

ACCESSING THE ON-SCREEN KEYBOARD OR NUMERIC KEYPAD

Some screens require entry of numbers or letters. A numbered or lettered "button" follows these selection panes as shown below. Touch the **ABC…** button to display an on-screen keyboard to enter letters or a combination of letters and numbers or the **123…** button to display the numeric keypad for entering numbers only. Touch the desired letters or numbers for the desired value. The entered characters will appear in a pane at the top of the keyboard or keypad. When the characters shown in the pane are correct, touch ACCEPT.

OR

For The Numeric Keypad

For the On-Screen Keyboard

Note: To display capital letters on the keyboard, press the **S. LOCK** key.

SYSTEM MENUS

ACCESSING THE MENUS

To access the AMTT's Main Menu containing the Reports, System Setups, Diagnostics, and Users screens and menus from the code entry screen, press

 # 2 7 2 3 *

Note: If the "Sorry, Car Wash Closed" screen is displaying, touch the blue area in the upper left-hand corner of the screen twice rapidly (like a computer's double click) to display the code entry screen. Then enter the maintenance menu code.

The **User Login** screen appears.

USER LOGIN

The User Login screen identifies who is entering the system and recognizes the authorities and access that have been assigned to that user by the location owner or operator.

1. Press the **ABC…** button beside the User field. This opens a keyboard on the display. Touch the letters on the keyboard for the User name. When the name appears correctly in the pane at the top of the keyboard, press the ACCEPT key to insert the name on the User Login screen.

2. Press the **ABC…** button beside the Password field. This opens a keyboard on the display. Press the letters or numbers on the keyboard for the password. When the password appears correctly in the pane at the top of the keyboard, press the ACCEPT key to insert the password on the User Login screen.

3. When the user and password information fields are correct, press the **Login** button on the display. The System Setup and Diagnostics menu appears.

Note: An Owner's **User** name is generated at the factory and assigned to the AMTT Color Screen unit.

The Owner's User name is **owner** (all lower case)
The Owner's password is **12345**

The factory generated owner's password is for initial use to access the menus. The location owner/manager should select and program a new password for the Owner's user name before the AMTT Color Screen is placed into operation to protect equipment settings and limit access to confidential information. Additional users may be assigned user names and passwords with access and authority to information the operator determines is appropriate. Refer to Users Menu information under **System Setup & Diagnostics**.

THE MAIN MENU

The AMTT Color Screen's **Main Menu** is a directory of the screens used to enter system settings and access diagnostic and report information. Named "buttons" on the menu describe the general topics that are available. Touch the named button that best describes the information and screens you wish to access.

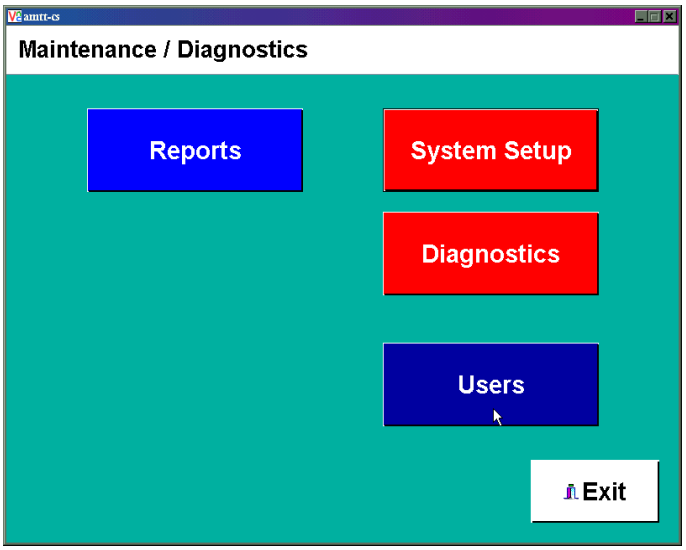

The **Reports** Menu provides the means for creating, viewing, and printing a variety of records maintained in the AMTT CS memory. Available reports pertain to revenue, customer transactions, equipment usage, and user access.

The **System Setups** Menu contains the screens used to configure the AMTT CS's operation and coordinate its communication and operation with other site equipment. Screens on the Systems Setups Menu also:

- Determine how information is presented to the customer on the display, code tickets, and receipts.
- Configure the wash packages, wash menus, and pricing.
- Determine how purchases will occur on the AMTT CS. (Will it accept codes, coins, bills, credit or wash cards. Will change dispense?)
- Configure operation of the AMTT CS with credit and wash club cards.

The **Diagnostics** Menu is used to monitor site equipment and perform equipment testing.

The **Users** Menu contains the security settings that allow operators to select and limit access to AMTT CS screens and reports per employee and block unauthorized access to confidential information and sensitive programming.

REPORTS

Reports screens are accessed from the Main Menu. Printable reports provide information pertaining to revenue, customer transactions and equipment operation and may be customized to encompass a selection of date ranges.

REPORTS	*About the Menu Selection*
Text Totals	**Selections: Shift, Manager, Current, Lifetime, Income Cycle.** Use the left and right arrows at the top right of the screen to scroll through the available Text Totals reports.
Period Totals	**Selections: Daily, Weekly, Monthly, Yearly.** Use the left and right arrows at the top right of the screen to scroll through the available Periodic Totals reports. **Custom Dates -** This button allows the user to define the time period.
Transactions	All information on the Transaction Report is generated automatically using information shared between site equipment on the network. The Transaction Report lists the individual purchases completed on the AMTT CS and indicates the date and time, a description, the code entered for the transaction (if any), the revenue the transaction generated, and the transaction's Completion status (Normal, Interrupted, etc.). **To view details about any transaction**: Touch on the desired transaction in the report to highlight it. Then touch the Transaction Details button at the bottom of the screen. A separate screen showing the detail information displays. 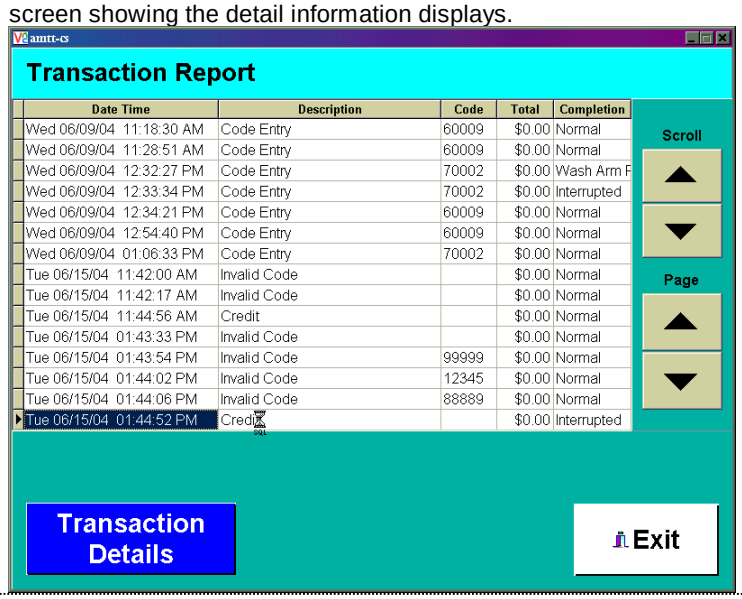
Transaction Details	The Transaction Details Report shows the detailed information pertaining to the transaction that was highlighted (selected) on the Transaction Report screen. A description of each field on this report is provided below.
Trans Id	Lifetime number of transactions.
Type	Type of purchase (e.g., credit card, wash club card, passcode, code, cash).
Class	Coinbox. This information is always the same. It refers to the type of device on which the purchase occurred.
Flags	Not available at this time.

REPORTS	*About the Menu Selection*
Completion	Was the transaction completed? Indicates if the transaction was interrupted, cancelled, or completed normally.
Start Date/Time	The date and time the transaction was initiated.
End Date/Time	The date and time the transaction was completed.
Duration	The time required for the transaction to complete (the amount of time lapsed between the start and end times).
Wash Selection	**Not Made -** Indicates if the customer did not make a selection **Forced Select -** Indicates that the machine automatically selected the highest value wash according to the money deposited. **Upgrade Timeout -** Indicates the customer did not select to upgrade within the time allotted for choosing to upgrade the wash selection.
SAW Selection	Indicates if the customer selected a FoamBrite or TouchFree wash during this transaction.
Follower Disabled	Indicates if the customer selected for the follower to be disabled during this transaction.
Voided	Not available at this time.
Attend Trans	Not available at this time.
Attend Collection	Not available at this time.
Total Bills	Bills deposited. Values of bills.
Total Coin 1	Coin 1 coins deposited.
Total Coin 2	Coin 2 coins deposited.
Total Value	Bills + Coins + Code (if matches the price for the purchased wash.
Total Change	Amount of change dispensed.
Change Not Given	The amount of change not dispensed that should have been.
Code Number	The code number entered for the transaction (if any).
Code Level	The level wash purchased with the code (1, 2, 3, or 4). **Note:** A -1 indicates there was no wash level to match the purchase.
Wash Level	The wash level purchased (1, 2, 3, or 4).
Shift Number	Not available at this time.
Shift ID	Not available at this time.
Club Card Value	The amount deducted from the Wash Club Card balance for this transaction.
Credit Card Value	The amount charged (or attempted to charge) to the credit card for this transaction.
Wash Package Totals	This report displays totals per wash package: how much cash, credit card, and wash club card did each wash package generate.

REPORTS	*About the Menu Selection*
Event Log	The Events Log is a record of activity for all equipment on the network with the AMTT CS. An event is an occurrence to the AMTT CS or other equipment that it communicates with on the network. For example, an event is recorded each time the AMTT CS door is opened, AMTT CS power is disrupted, or any other equipment on the network is not communicating (offline). Use the up and down arrows beneath SCROLL to advance the report information shown on the screen up or down one line at a time. Use the up and down arrows beneath PAGE to scroll the report page by page.
Exception Log	The Exception Log describes and provides a list of unrecoverable problems that occur with the system. Use the up and down arrows beneath SCROLL to scroll advance the report information shown on the screen up or down one line at a time. Use the up and down arrows beneath PAGE to scroll the report page by page. The left and right arrows shift the view of the screen right or left to show all information on each line of the report.

SYSTEM SETUPS MENU

Selecting System Setups on the Main Menu accesses the **System Setup Menu**. The System Setup menu is used to select and enter settings for the system's operation. The System Setup selections are displayed as blue "buttons" on the touch-screen. When pressed, each of these System Setup buttons presents a screen or screens used to complete system setups. There may be multiple additional submenus and/or screen selections within a System Setup selection. Each System Setup selection and the additional submenu information is discussed in this section.

Additional Buttons on this Screen

In the lower left hand corner of this screen are three red buttons pertaining to the program that operates the AMTT Color Screen system. These buttons are used in the event it is necessary to close or restart the program, or shut down the computer altogether.

Press the **Shut Down** button to close the Windows system. Use this button before turning off power to the system to protect operations. **Important:** See Read This Before Removing Power! in this manual.
Press the **Reboot** button to reboot the Windows operating system.
Exit to Boot App closes the program and exits to the boot application.

SETUP MENU REQUIREMENTS KEY

The following key is used throughout the System Setups Menu to indicate clarify setting requirements. Each menu selection is graded according to the key.

System Setups Menu selections marked with an **R** in the Setup column are required at ***all*** wash locations.

System Setups Menu selections marked with an **O** in the Setup column are required if the described option is installed.

System Setups Menu selections marked with an **A** in the Setup column are ***not*** required at wash locations, but provide settings for additional features that are available to enhance operation or for optional processes that are used to customize operations.

System Setups Menu selections marked with an **NA** in the Setup column do not require a setting. These selections contain additional instructions pertaining to features and tools available on the menu screens.

GENERAL SETUP

IMPORTANT: DO NO CHANGE SETTINGS FROM DEFAULTS UNLESS YOU ARE CERTAIN THE DEFAULT NEEDS TO BE CHANGED. CONTACT RYKO CUSTOMER SERVICE WITH QUESTIONS.

R=Required Setting **O**=Required if option is installed **A**=Not Required, Additional Features **NA**=Not a Setting

GENERAL SETUP	Setup	*About the Menu Selection*
RykoNet (Tab)	**R**	This selection identifies the node used in the network system to connect various components with one another so that they will communicate correctly. To operate correctly, each AMTT CS coin box on the network must be assigned its own node ID number. **Enter a number between 1 and 8. IMPORTANT:** Assign the same Node ID to the AMTT CS coinbox and the PLC Node for the wash machine that it will be arming. **Example:** The Node ID for an AMTT CS is 1. The PLC Node for the wash machine that the AMTT CS will operate with should also be identified as number 1. At locations with more than one AMTT CS, a second wash bay's AMTT CS is assigned as Node ID number 2. The corresponding PLC in the car wash equipment for that bay should also be identified as number Node ID 2. Assign the Node ID numbers for the AMTT CS and its corresponding wash equipment in wash bays 3 through 8 in the same manner. Use the arrows to the right of the pane to scroll the number up or down until the correct number is highlighted and appears in the pane.
Options (Tab)	**A**	Multiple settings are entered on this screen. Each selection is described separately below.
Escrow	**A**	**Selections: On or Off.** Set to ON to allow customers to add money or codes while waiting if the wash is already in operation. Press the button to toggle between selections. Default is ON.
Upgrades	**A**	**Selections: On or Off.** Set to ON to allow the customer to purchase upgrades by adding additional money at the coinbox. Press the button to toggle between selections. Default is ON.
Play Digits	**A**	**Selections: On or Off.** If set to Yes the prerecorded audio number messages will play when the numbered keys are pressed ("1", "2", "3", etc.) Press the button to toggle between selections. Default is OFF.
Show Digits	**A**	**Selections: On or Off.** If set to Yes if the display will show the digits entered on the Enter Code screen. Press the button to toggle between selections. Default is ON.
Show Time	**A**	**Selections: On or Off.** If set to Yes, the time is displayed in the lower right corner of the touch screen. Default is ON.
PE Upgrade Disable	**A**	**Selections: On of Off.** Set to On to protect a customer's purchase selections from accidental upgrade or alteration by the next customer in line while the customer drives away from the coin box and into the bay and the wash begins. Default is ON.
Status Display	**A**	**Selections: On or Off.** For debugging purposes only. Displays the wash status in the Sorry Car Wash Closed screen. Press the button to toggle between selections. Default is ON.
Push for Assistance	**A**	**Selections: On or Off.** Set to On if an intercom is installed.

GENERAL SETUP (continued)	**Setup**	***About the Menu Selection***
CAW Connected	**A**	**Selections: On or Off.** This selection is used to indicate if a Code-A-Wash is connected to the network so that the AMTT CS can accept codes. Set to On if a Code-A-Wash is connected and to display the code screens. Press the button to toggle between the On/Off selections.
Always Give Change	**A**	**Selections: On or Off.** This selection is used to determine whether change is provided when the photoeye is blocked/unblocked. If set to OFF then, if necessary, change will be returned if the photoeye is blocked.
Attended Site	**A**	**Selections: On or Off.** Set to On if site personnel will be available to assist customers. "Contact Cashier" screens will display during operation when appropriate. Set to Off if the site will be unattended. Press the button to toggle between selections. Default is OFF.
Entrance Sign Demo Mode	**A**	**Selections: On or Off.** Set this selection to OFF. This selection is used for trade/convention show demonstration purposes only.
Show Current Wash Speed	**A**	**Selections: On or Off.** This selection sets the display of the wash speed in the lower left corner of the animation screen using the following indicators: VWS = L (Low) VWS = N (Normal) VWS = H (High)
Card Rdr/Bill Acc Relay	**A**	**Selections: On or Off.** Set this selection to OFF. This selection is used in the event the SCI card reader experiences locking problems and does not release the card. **IMPORTANT:** If card reader problems arise, contact customer support for firmware updates for the SCI card reader.
Self Serve Devices On Site	**O**	**Selections: On or Off.** Set to ON if the arming type is "Network WEI" and if there are self-serve devices installed at the location.
Coins (Tab)	**O**	**These settings are required if the AMTT CS will accept coins.** Multiple settings are entered on this screen. Each is described separately below.
Coin Acceptors	**O**	**Selections: Enabled or Disabled.** Set to ENABLED if a coin mechanism is installed to accept coins. Press the button to toggle between selections.
Coin 1 Value	**O**	This setting determines the value of each Coin 1 type coin deposited. Press the **123…** button to access the numeric keypad. Then press the numbers to enter the coin value desired. When finished, press ACCEPT.
Coin 2 Value	**O**	This setting determines the value of each Coin 2 type coin deposited. Press the **123…** button to access the numeric keypad. Then press the numbers to enter the coin value desired. When finished, press ACCEPT.
Change Hopper Value	**O**	**Selections: Enabled or Disabled.** This setting determines the denomination of the change that will be dispensed from the AMTT CS. Press the **123…** button to access the numeric keypad. Then press the numbers to enter the coin value desired. When finished, press ACCEPT. Default = $.25 (Quarters) to dispense
Bill Acc(ept) (Tab)	**O**	**Selections: Enabled or Disabled.** Set to ENABLED to allow the AMTT CS to accept bills. Additional settings are entered on this screen. The selections are described separately below.
Accept $1	**O**	**Selections: On or Off.** Set to ON to allow the bill acceptor to accept $1.00 bills. Press the button to toggle between selections.
Accept $2	**O**	**Selections: On or Off.** Set to ON to allow the bill acceptor to accept

		$2.00 bills. Press the button to toggle between selections.

GENERAL SETUP (continued)	**Setup**	***About the Menu Selection***
Accept $5	**O**	**Selections: On or Off.** Set to ON to allow the bill acceptor to accept $5.00 bills. Press the button to toggle between selections.
Accept $10	**O**	**Selections: On or Off.** Set to ON to allow the bill acceptor to accept $10.00 bills. Press the button to toggle between selections.
Accept $20	**O**	**Selections: On or Off.** Set to ON to allow the bill acceptor to accept $20.00 bills. Press the button to toggle between selections.
Card Reader (Tab)	**O**	**Selections: Enabled or Disabled.** Set this selection to ENABLED if a card reader is installed. Press the button to toggle between selections. Additional settings are entered on this screen. The selections are described separately below.
Reader Type*:*	***O***	**Selections: Club Card (SCI) or Credit Card (Panasonic).** This selection identifies the type of card reader installed on the AMTT Color Screen. Press the arrow button to the right of the selection box pane to view the selections. Touch the desired selection to highlight it and insert it in the pane.
Printers (Tab)	**O**	**Selections: Enabled or Disabled.** Use this selection to turn the print option on or off. If there is no printer option installed with the card reader this selection must be turned to DISABLED.
Environment (Tab)	**NA**	Multiple settings are entered on this screen. Each is described separately below.
Heater	**NA**	**Default: 60° F.** This setting cannot be adjusted.
Outside Temp Calibration	**NA**	**Default: 0.** This setting is used to maintain the same temperature reading so as to coordinate with other devices at or near the site (e.g., another AMTT CS, a nearby bank sign, etc.). The setting can be adjusted +10 or -10 degrees. This setting effects the actual outside temperature. It does adjust the actual outside temperature and broadcast this value.
Cooling Fans	**NA**	These settings control the operation of the cooling fans inside the AMTT CS.
Inlet	**NA**	**Default: 35° F.** This setting cannot be adjusted.
Exhaust	**NA**	**Default: 75° F.** This setting cannot be adjusted
Timers / Receipts (Tab)	**NA**	The following screens provide the option of adjusting timers in the software.

GENERAL SETUP (continued)	**Setup**	***About the Menu Selection***
Wash Upgrade Timeout (Sec)	**NA**	**Default 30** (seconds) As a customer enters a code or deposits money the touch-screen menu indicates the wash that has been purchased. This field determines how much time is allotted for the customer to push a button on the touch-screen to select an upgraded wash at a higher value than the purchased wash and deposit the additional money required. Use the up and down arrows beside the field to increase or decrease the number of seconds allotted. When the seconds indicated have elapsed following the original entry of the code or deposit, the option to upgrade is no longer available.
PE Timeout (Sec)	**NA**	**Default 30** (seconds). Cash transactions only. This setting determines the how long after the photoeye is unblocked at the AMTT CS that the cancel button appears, that will allow the customer to cancel transaction.
CC Authorize Timeout (Sec)	**0**	**Default: 60** (seconds). This setting determines how much time will be allotted for the credit card authorization to be completed before the transaction will be cancelled. Use the up and down arrows beside the field to increase or decrease the number of seconds.
Enter Code Timeout (Sec)	**NA**	**Default: 3** (seconds). This setting is used when a Web Server is installed on the network at the site. This is used in conjunction with 6-digit web code support. If the Web Server is NOT on line when a 5-digit CAW code is entered at the AMTT CS a timeout of 1 is used. Otherwise, if the Web Server is online then this setting is used.

GENERAL SETUP (continued)	**Setup**	***About the Menu Selection***
Cash Receipts	**A**	**Selections: Never Print, Always, Prompt.** This selection is used to determine receipt printing. Set to: **Never Print** to disable receipt printing. **Always Print** to print a receipt for every customer. **Prompt** to ask if the customer if they wish to print a receipt.
Shockwave Video	**A**	This screen contains the information and controls pertaining to any custom greeting video that may have been installed.
Shockwave Video Filename	**A**	This setting identifies the electronic file name of the greeting video file. Touch the **ABC…**button beside the field to access the on-screen keyboard and type in the full name of the file including the extension. The shockwave video file name should always be set to the file name **default.swf** unless a custom shock wave video is used in its place. **Example: JLM.swf**.
Play Video in Escrow	**A**	**Selections: Enabled or Disabled.** Set to ENABLED to allow the video to be played while the wash is in operation. Default is DISABLED.
CD-R/RW Backup	**A**	This screen provides the ability to automatically backup the AMTT CS database to a CD-R or CD-RW.
Automatic Backup	**A**	**Selections: Enabled or Disabled.** Set to ENABLED to automatically backup the database at a specified time. Default is DISABLED. **IMPORTANT:** If set to ENABLED, be sure that a blank CD-R / CD-RW is inserted in the CD drive before closing the door to the coin box.
Time Period	**A**	**Selections: Daily or Weekly.** This selection determines if an automatic backup will occur daily or once a week. **Note:** This option will only be visible if the Automatic Backup setting is set to ENABLED.
Time of Day	**A**	**Selections: 12:00 A.M. through 7:00 A.M.** The selection determines at what time an automatic backup will occur. **Note:** This option will only be visible if the Automatic Backup setting is set to ENABLED.
Day of Week	**A**	**Selections: Sunday through Saturday.** This selection determines what day of the week a weekly backup will occur. **Note:** This option will only be visible if the Automatic Backup setting is set to ENABLED and the Time Period setting is set to WEEKLY.

CARWASH OPTIONS

R=Required Setting **O**=Required if option is installed **A**=Not Required, Additional Features **NA**=Not a Setting

CARWASH OPTIONS	Setup	*About the Menu Selection*
General (Tab)	**R**	**Selections: Generic, VT2000, Select-A-Wash, US2001 OHD.** Press the arrow to the right of the selection box to view the WASH TYPE selections available. Touch on the desired selection to highlight it. Select VT2000 if operating the AMTT with a conveyor wash system. Select Select-A-Wash if operating the AMTT with a Select-A-Wash vehicle wash system. Select Generic for AMTT operation with all other wash equipment. The selection should insert in the selection box pane. When the desired selection appears in the selection box pane, touch the Accept button.
Arming (Tab)	**R**	**Selections: RykoNet, WEI, or Network WEI.** This selection configures the type of arming used on the equipment. Select RykoNet if the equipment is armed via a network, WEI if armed via Wash Equipment Interface, or Network WEI if armed via Network Wash Equipment Interface.
Freestanding Dryer (Tab)	**O**	
Display Bug Shield Prompt	**O**	**Selections: On or Off.** This setting determines if a message displays to ask the customer if they wish to disable the follower drop to avoid interference with exterior vehicle accessories. Set to On for the message to display. Touch on the button to toggle between selections.
WEI Bug Shield Output	**O**	**Selections: 1 thru 12.** Default is 12. This selection disables the follower on a ThrustPro Dryer or the center fan of a SlimLine Dryer. Enter the same output number as the follower.
WEI Armed Dry Output	**O**	**Selections: 0 thru 12.** Default is 0. Enter the number here of the output that arms the dryer. Set to 0 if no dryer is installed.
Select-A-Wash (Tab)	**NA**	Multiple settings are entered on this screen. Each selection is described separately below.
Default Wash Type	**NA**	**Selections: FoamBrite, TouchFree** This selection determines the wash the customer will receive if no selection is made.
Level 1 Option	**NA**	**Selections: Customer Choice, TouchFree, FoamBrite, Combination, or Package.** This selection determines the wash the customer will receive if wash package level 1 is selected.
Level 2 Option	**NA**	**Selections: Customer Choice, TouchFree, FoamBrite, Combination, or Package.** This selection determines the wash the customer will receive if wash package level 2 is selected.
Level 3 Option	**NA**	**Selections: Customer Choice, TouchFree, FoamBrite, Combination, or Package.** This selection determines the wash the customer will receive if wash package level 3 is selected.
Level 4 Option	**NA**	**Selections: Customer Choice, TouchFree, FoamBrite, Combination, or Package.** This selection determines the wash the customer will receive if wash package level 4 is selected.
Other Wash Option	**NA**	This selection determines the wash the customer will receive if the wash is other than the washes programmed for level 1,2,3, or 4.

CARWASH OPTIONS

R=Required Setting **O**=Required if option is installed **A**=Not Required, Additional Features **NA**=Not a Setting

CARWASH OPTIONS	Setup	*About the Menu Selection*
Variable Wash Speed	**A**	Press the Variable Wash Speed Settings button to access the setup screens. If Variable Wash Speed is enabled the current and base speed will also be displayed along with the ability to automatically/manually change the speed. The Variable Wash Speed settings are used to alter equipment operation and vary operation speed according to customer traffic flow. Settings allow the Variable Wash Speed to engage automtically according to customer activity at the AMTTCS or manually according to attendant controls provided on this screen. Variable Wash Speed can also be manually controlled via the Main Operation Screen on the Code-A-Wash console. NOTE: If you choose to enable Variable Wash Speed on the Code-A-Wash console then you must diable it on the AMTTCS and vice-versa.

CARD PROCESSING SETUPS

The following setups are required to enable or disable credit card processing and to configure the AMTT CS to communicate with the Credit Charge Server or EP Manager / EPI Server. **Note:** ICVerify and the Credit Charge Server or EP Manager /EPI Server setup procedures are also required for credit card acceptance and authorization. Refer to IC Verify and Credit Charge Server or EP Manager / EPI Server instruction and configuration documents provided in the **Drawings** section of this manual.

R=Required Setting **O**=Required if option is installed **A**=Not Required, Additional Features **NA**=Not a Setting

Card Processing Setups	Setup	*About the Menu Selection*
Credit Cards (Tab)	**O**	The Credit Cards settings determine whether credit cards are accepted, receipts are given, and whether Credit Charge Server or EP Manager / EPI Server handles the processing of cards.
Accept Credit Cards	**O**	**Selections: Yes or No.** Touch the button to toggle acceptance between Yes and No. Set to Yes, to accept credit cards.
Processing Option	**O**	**Selections: Credit Charge Server, EP Manager / EPI Server.** Depending on which piece of software is installed on site depends on this setting. Default is EP Manager / EPI Server.
Receipts	**O**	**Selections: Never Print, Always Print, Prompt.** Touch the button to toggle the selection. Set to: **Never Print** to disable receipt printing. **Always Print** to print a receipt for every transaction. **Prompt** (Default) to ask the customer if they wish to print a receipt.
Wash Club Cards (Tab)	**O**	The Wash Club Card settings may or may not be visible depending on whether the card reader type is "SCI". These settings determine whether wash club cards are accepted and receipts are provided.
Accept Wash Club Cards	**O**	**Selections: Yes or No.** Touch the button to toggle between selections. Set to Yes to accept Wash Club Cards.
Receipts	**O**	**Selections: Never Print, Always Print, Prompt.** Touch the button to toggle the selection. Set to: **Never Print** to disable receipt printing. **Always Print** to print a receipt for every transaction. **Prompt** (Default) to ask the customer if they wish to print a receipt.
Wash Mag Cards (Tab)	**O**	These settings determine whether wash mag cards are accepted. For example, discount, loyalty, fleet, prepaid, etc.
Accept Wash Mag Cards	**O**	**Selections: Yes or No.** Touch the button to toggle between selections. Set to Yes to accept Wash Mag Cards.
Self-Serve Terminal (Tab)	**O**	The Self-Serve Terminal settings determine if credit card charges may issue codes to be used with self-serve equipment.
Allow Terminal Codes		**Selections: Yes or No.** Set to Yes to allow self-serve codes to be used at the AMTT CS.
Register Credit Cards		**Selections: Never Register, Always Register, Prompt.** Set to: **Never Register** to never issue a code. **Always Register** to always issue a code. **Prompt** (Default) to display the question "Do you want a code for other self-serve items?"

DATE/TIME

R=Required Setting **O**=Required if option is installed **A**=Not Required, Additional Features **NA**=Not a Setting

DATE/TIME	Setup	*About the Menu Selection*
Top field on screen	**R**	This field sets the date on the AMTT CS. Use the down arrow to the right of the pane to access a drop-down calendar. Point and click on the desired date. **Note:** Today's date will always be circled in red.
Hour	**R**	**Selections: 0 to 23.** Use the up and down arrows to increase or decrease the number until the desired hour is displayed. **Note:** The hour may be set for an AM/PM or 24 hour format as desired.
Minute	**R**	Use the up and down arrows to increase or decrease the number until the desired minute is displayed.
Second	**R**	Use the up and down arrows to increase or decrease the number until the desired second is displayed.
Time Zone	**R**	The Time Zone shown on this screen reflects the time zone setting on the PC's control panel. To change the time zone, plug in a mouse and access the PC Control Panel. Click on Date/Time and then click on the Time Zone tab.

WASH SETS

A Wash Package Set is a grouping of up to 4 wash packages that is presented together as a wash menu on the customer display. The AMTT CS allows for multiple Wash Package Sets to be created and stored in memory for activation as needed. However, only one Wash Package Set may be enabled at any given time.

Here's an example of how this can work: One day a week the ABC Car Wash offers a "Dollar Off Day" promotion -- all washes are offered for $1.00 less than the usual price. With the promotion's Wash Package Set created ahead of time and stored in memory, a few simple setting changes on these screens can present customers with the new wash menu showing the promotion's wash package pricing and arm the vehicle wash according to the promotional pricing. During the promotion, the standard Wash Package Set with the regular pricing was disabled and held in the AMTT CS' memory, ready to be restored when the promotion is over.

R=Required Setting **O**=Required if option is installed **A**=Not Required, Additional Features **NA**=Not a Setting

WASH SETS	Setup	*About the Menu Selection*
◂ ▸ (buttons)	**NA**	The left and right arrow buttons in the upper right of the screen are used to scroll through and display the wash package set selections. As new wash package sets are created, they are added to this listing and are accessed by the scroll. **IMPORTANT:** Touching an action button (**Edit, Delete, or Make Current**) will directly affect whatever wash package set that is shown on the display. Be sure the correct selection is on the display when pressing an action button. **CAW** indicates a wash set that was created on the Code-A-Wash unit and is stored on the AMTT CS **Default** - The Default setting is a preprogrammed wash package set containing four washes that may be enabled or edited for use at a location. See instructions for the Edit button. **SS Terminal -** Not In Use At This Time.
Edit (button)	**NA**	This button is used to edit an existing wash package set and its contents. Use the left and right arrow buttons in the upper right of the screen to scroll to the display the desired wash package set. Then press the EDIT button to access the setting screens pertaining to the displayed set. The following tabbed screens will be presented.
General (Tab)	**R** (If No CAW)	This edit screen shows the current Name, Display Name, and Price settings. **Name -** To change the name of the wash package set, touch the **ABC…** button to the right of the pane to access the on-screen keyboard. Touch the pane at the top of the keyboard that shows the current entry and delete the existing information using the backspace key. "Type" in a name and press ✓Accept at the bottom of the keyboard. **Packages -** This setting indicates the number of washes in the wash package set. To change the number of packages in the wash package set, use the up and down arrows to increase or decrease the number. **Note:** Each wash package set can contain from 1 to 4 wash packages. When finished making changes on this screen, you may either Accept the changes or continue to the Wash Packages tab to change the actual wash packages in the wash package set.
Wash Packages (Tab)	**R** (If No CAW)	This edit screen opens to Package 1 and shows the current Name, Display Name, and Price settings for wash package 1 in the wash package set. To make changes, to a particular wash package in the wash package set, touch the tab for the wash package you wish to change. A list of the programmed packages appears in the pane on the left side of the screen with the current selection highlighted. Use the up and down arrows to the right of the pane to scroll through the list until the desired selection is highlighted. Then press EDIT PACKAGE.

WASH SETS (continued)	**Setup**	***About the Menu Selection***
Edit Package (button)	**NA**	Touch this button to access the screens that are used to alter the content of a wash package within a wash package set. The following tabbed screen displays.
General (Tab)	**R** (If No CAW)	**Name -** To edit the name, touch the **ABC…** button to the right of the name pane to access the on-screen keyboard. Touch the pane at the top of the keyboard that shows the current entry and delete the existing information using the backspace key. "Type" in a name and press Accept at the bottom of the keyboard. **Display Name -** To edit how the wash package name appears on the customer menu, touch the **ABC…** button to the right of this pane to access the on-screen keyboard. Touch the pane at the top of the keyboard that shows the current entry and delete the existing information using the backspace key. Reenter a name and press ✓Accept at the bottom of the keyboard. **Price -** To edit the wash package price, touch the 123… button to the right of the pane to access the on-screen numeric keypad. **Includes Code For Vacuum** - **Selections: Yes or No.** Touch the button to toggle between selections. **Map Vacuum Code To** - Touch the button to select which of the 12 CAW Wash Keys contains a vacuum.
Wash Options (Tab)	**R** (If No CAW)	This screen is used to edit the options in a wash package that is included in a particular wash package set. Use the up and down arrows to scroll through the list of options that may be included in a wash package. Touch the desired selections in the list to insert a check mark beside them. When finished, touch the Accept button.
Wash Menu (Tab)	**R**	This screen is used to name the options that will occur in the wash in a format to be shown on the wash menu.
Make Current (button	**NA**	This button is used to enable a wash package set for active use. Use the left and right arrow buttons in the upper right of the screen to scroll until the desired wash package set is shown on the AMTT CS display. Then press the MAKE CURRENT button to enable the set. The displayed set will now appear as the wash menu that is presented to the customer.
New (button	**NA**	Press the New button to create a new Wash Package Set. Complete the information on all tabs (screens) to create a new wash package set.
General (Tab)		
Name	**R** (If No CAW)	This field is where a wash package set is named. To enter the name, touch the **ABC…** button to the right of the name pane to access the on-screen keyboard. "Type" in a name. When finished, press Accept at the bottom of the keyboard.
Packages	**R** (If No CAW)	**Selections: 1, 2, 3, or 4.** This field determines how many wash packages will be included in the set. Use the up and down arrows to the right of the field to increase or decrease the number.
Wash Packages (Tab)	**R** (If No CAW)	These screens determine which wash packages will be included in the wash package set. **Note:** The options included in any wash packages may be edited. To edit a wash package, touch the Edit button.

WASH SETS (continued)	**Setup**	***About the Menu Selection***
Package 1 (Tab)	**R** (If No CAW)	A list of available wash packages is provided on this screen.. Use up and down arrows to the right of the list to move the highlighting selection bar to the desired package. To accept the highlighted package in the wash set, touch the Accept button. To edit the package first, touch the Edit button. When finished with editing, touch the Accept button on the Edit screen to accept the editing, then press the Accept button on the Package screen to accept the package into the wash package set.
Package 2 (Tab)	**R** (If No CAW)	Same as Package 1.
Package 3 (Tab)	**R** (If No CAW)	Same as Package 1.
Package 4 (Tab)	**R** (If No CAW)	Same as Package 1.
Delete (button	**NA**	To remove the displayed wash package set from the AMTT CS press the Delete button. **IMPORTANT:** Be sure the correct wash is displayed before pressing this button.

WASH PACKAGES

The Wash Packages menu contains the information used to define the wash packages and values and the customer menu display.

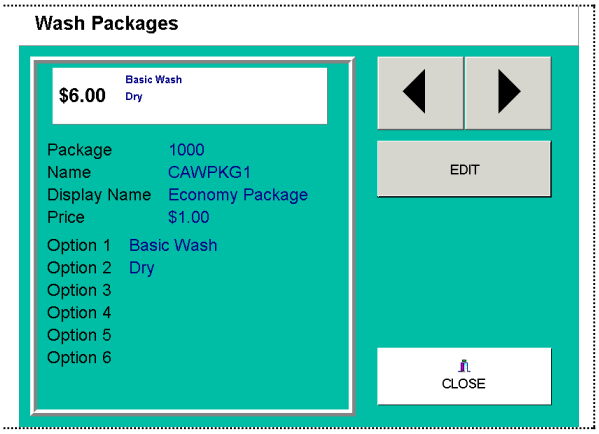

The Wash Packages screen shows the current settings for each wash package. To view the settings for each package, use the left and right arrow buttons to scroll through the package numbers. While scrolling, notice that the number in the PACKAGE field changes. The other information displayed on the screen also changes to show the current settings for the package number displayed.

The pane at the top of the screen shows how the customer's menu will display with the current settings. To change the settings for a wash package scroll through the packages until the desired package is shown on the display. Then touch the EDIT button. See the information about the edit selections below. To exit the Wash Packages information, touch the CLOSE button.

When pressing the EDIT button
The Edit Wash Package screen displays. **Selections: General, Options, or Wash Menu.** The selections provided as tabs on this screen are described separately below.

R=Required Setting **O**=Required if option is installed **A**=Not Required, Additional Features **NA**=Not a Setting

WASH PACKAGES	**Setup**	***About the Menu Selection***
General (Tab)	**R** (If No CAW)	The following setting functions are displayed on the General tab and used to set and edit the wash package information. The selections are described separately below.
Name	**R** (If No CAW)	This selection allows you to name a wash package with a name that is different from what appears on the customer menu and is used only for internal purposes. Press the ABC… button to the right of the pane to open the touch-screen keyboard. Press the letters and/or numbers to enter the desired name for the wash package. Then press ACCEPT.
Display Name	**R** (If No CAW)	This setting determines the wash package name that will display on the menu the customer uses when selecting a wash. Press the ABC… button to the right of the pane to open the touch-screen keyboard. Press the letters and/or numbers to enter the desired name. Then press ACCEPT.
Price	**R** (If No CAW)	This setting determines the price of the wash package that is displayed on the customer menu. Press the 123… button to the right of the pane to open the touch-screen keyboard. Press the numbers to enter the desired amount. Then press ACCEPT.
Includes Code For Vacuum	**A**	**Selections: Yes or No.** Touch the button to toggle between selections. This setting allows a vacuum code to be included with the wash package.
Map Vacuum Code To	**A**	This setting allows the ability to select which of the 12 CAW Wash Keys on the CAW contain a vacuum with the wash package.
Options (Tab)	**R** (If No CAW)	This screen is used to determine the wash functions that will be included in a wash package. Use the up and down arrow buttons on the right of the screen to scroll through the list of wash functions. Touch the selections you wish to include until a check mark appears beside all of the options included in the wash package. When finished, press ACCEPT. **Note:** To unselect a wash function, touch the name again. The check mark disappears.
Wash Menu (Tab)	**A**	This selection is used to enter descriptive names for the wash functions that will appear on the customer menu as part of the wash package. These names should coincide with and/or describe the functions that were entered on the Options screen. **Note:** Because there are only six (6) wash menu entries available per wash package, you may need or wish to combine two or more of the wash functions that are included in a wash package under a single description. Press the ABC… button to the right of the pane to open the touch-screen keyboard. Press the letters and/or numbers to enter the desired name for the wash package. Then press ACCEPT.

SITE INFORMATION

IMPORTANT: IF THE AMTT CS WILL BE ACCEPTING CREDIT CARDS, THE INFORMATION ENTERED IN THE SITE INFORMATION FIELDS MUST MATCH SIMILAR INFORMATION FIELDS (E.G., ADDRESS, PHONE, ETC.) PROVIDED ON THE ICVERIFY APPLICATION AND APPROVAL FORMS *EXACTLY* TO AVOID CREDIT AUTHORIZATION MALFUNCTION.

R=Required Setting **O**=Required if option is installed **A**=Not Required, Additional Features **NA**=Not a Setting

SITE INFORMATION	Setup	*About the Menu Selection*
Identification (Tab)	**R**	Press the **ABC…** button to open the touch-screen keyboard. Type in a description that describes the coinbox and identifies and differentiates this coinbox from other coin boxes at the location (if any).
Model #	**N/A**	Press the **ABC…** button to open the touch-screen keyboard. Type in a description if desired.
Serial #	**R**	Press the **ABC…** button to open the touch-screen keyboard. If the serial number displays here as all zeroes, type in the serial number located on the inside of the door (wall-mount model) or on the back of the AMTT CS head (pedestal mount model).
Address (Tab)	**R**	Enter the site address on this tab. Press the **ABC…** button to the right of the pane to open the touch-screen keyboard. Press the letters and/or numbers to enter the desired information. Then press ACCEPT.
Contact (Tab)	**R**	The fields described below are used to enter contact information pertaining to the wash location. Press the letters and/or numbers to enter the desired information in all of the fields. Then press ACCEPT.
Site Phone	**R**	Enter the site location's telephone number on the touch-screen keyboard.
Fax	**A**	Enter the site location's Fax phone number (if any) on the touch-screen keyboard.
Web	**A**	Enter the site location's web address (if any) on the touch-screen keyboard.
Promotion (Tab)	**A**	Optional. Press the **ABC…** button to enter a message to print on credit card receipts. Press the letters and/or numbers to enter the desired information. Then press ACCEPT.

PASSCODES

Passcodes are created to allow the owner/operator to generate a wash instantly by entering a specific code that they have programmed for that purpose. The operator may also program a passcode specifically for the service technician so that he or she can perform test washes during maintenance visits. For convenience, passcodes may be programmed once and retained in the AMTT CS memory for regular use by specific personnel. To prevent unauthorized use, the codes may be changed, enabled, or disabled at any time at the operator's discretion. **Note:** Passcodes are not enabled when the AMTT CS leaves the factory.

Note: Report information will document washes generated using owner and service utility codes.

IMPORTANT: All passcodes must begin with an ✱(asterisk or star) and end with the # sign.

Example: ✱ 1 2 3 #

R=Required Setting **O**=Required if option is installed **A**=Not Required, Additional Features **NA**=Not a Setting

PASSCODES	Setup	*About the Menu Selection*
Owner Passcode	**A**	**Code Field:** Touch the **123…** button to display the numeric keypad. Then enter the owner passcode by pressing on the numbered keys. Touch ACCEPT when the desired code is entered. **Setting: Enabled or Disabled.** Touch the Enabled/Disabled button to toggle between setting selections until the desired setting shows on the button. Set to ENABLED to allow the code to arm a wash.
Service Passcode	**A**	**Code Field:** Touch the **123…** button to display the numeric keypad. Then enter the service passcode by pressing on the numbered keys. Touch ACCEPT when the desired code is entered. **Setting: Enabled or Disabled.** Touch the Enabled/Disabled button to toggle between setting selections until the desired setting shows on the button. Set to ENABLED to allow the code to arm a wash.

CUSTOM MESSAGES

Audio messages that provide instructions to the customer during equipment operation may be customized for the wash location. Two screens list the available pre-recorded messages under separate category headings. Touch the blue NEXT and BACK buttons to toggle between the screens.

TO SELECT A GREETING MESSAGE

Touch the down arrow to the right of the selection box (message pane). A drop-down list appears. Touch the desired message in the list to highlight it. The selected message will appear in the message pane.

TO SELECT OTHER MESSAGES

Follow the steps below to activate a message under the Starting Transaction, Wrong Code Entered, or Credit Card Authorization headings.

IMPORTANT: ENABLE ONLY ONE MESSAGE AT A TIME UNDER EACH HEADING. THE BUTTON BESIDE ALL OTHER MESSAGES IN THE CATEGORY SHOULD BE SET TO "DISABLED."

1. Select the desired message for a category heading.
2. Touch the button beside a message to toggle the setting until the button reads "ENABLED."

DIAGNOSTICS MENU

Selecting **Diagnostics** on the Main Menu accesses the screens used to monitor operations and to perform system tests.

The Diagnostics Menu selections are shown at right and explained in detail in the information below.

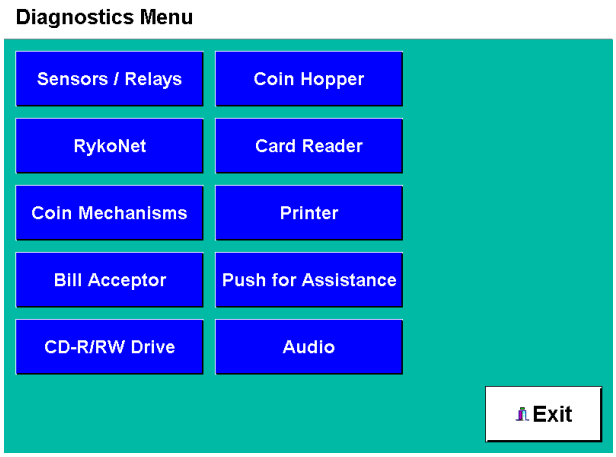

SENSORS / RELAYS

SENSORS / RELAYS	*About the Menu Selection*
Sensors (Tab)	
Analog Sensors	The analog sensors continually monitor equipment conditions. The current status is reported in the fields described below
IO Module Voltage	This reading indicates the voltage of the 24V power supply used for the bill acceptor, photoeye relay, and the exhaust and inlet fans located at the base of the coin box behind the coin hopper. See voltage adjustment information in this manual if voltage is less than 24V.
Light Level	This reading refers to a value associated with the amount of light currently sensed by the ambient light sensor under the coinbox head. It does not relate to any light value.
LCD Temperature	The LCD temperature indicates the temperature read by the temperature sensor under the coinbox head. The display contrast updated once per minute according to average temperature readings.
Outside Temperature	This reading refers to the temperature outside the AMTT CS casing.
Inside Temperature	This reading refers to the temperature inside the AMTT CS casing.
Digital Inputs	
Security Loop	This selection indicates the condition of the security loop (white wire with black stripes) that connects the AMTT's stand to an anchor bolt. This wiring is used to detect removal of the coinbox from the site. When the security loop is unbroken and OK, the circle to the right will be red.
Door Sensor	When the door is open, the circle to the right is red.
In Use	When the wash equipment is operating, the circle to the right is red.
Armed	When the wash equipment has been armed, the circle to the right is red.
Bayplate	When the bayplate is activated, the circle to the right is red.
Photoeye	When the coinbox photoeyes are blocked, the circle to the right is red.

SENSORS / RELAYS (continued)	***About the Menu Selection***
Outputs/Relays (Tab)	The following relays may be
Activate 1	**Selections: On or Off.** Not currently used.
Activate 2	**Selections: On or Off.** Not currently used.
Activate 3	**Selections: On or Off.** Not currently used..
Activate 4	**Selections: On or Off.** Not currently used.
Lights	**Selections: On or Off.** Not currently used..
Start	**Selections: On or Off.** Press the button to test the START button for conveyor wash systems. List to hear the relay turn ON and OFF.
Inlet Fan	**Selections: On or Off.** This output relay is ON by default and turns OFF when temperature setting is reached.
Exhaust Fans	**Selections: On or Off.** This output relay is ON by default and turns OFF when temperature setting is reached.
Heater	**Selections: On or Off.** This output relay is OFF by default and turns ON and OFF according to temperature settings.
Backup	**Selections: On or Off.** Not currently used..

RYKONET DIAGNOSTICS

RYKONET DIAGNOSTICS	***About the Menu Selection***
RykoNet	This selection accesses the Network Traffic Diagnostics screen that shows all of the equipment currently connected to the network. Each component type (PLC, Code-A-Wash, Vacuum, etc.) is listed separately on the screen and indicates the current condition of the component and what or if it is communicating to the network. Note that each component type may list more than one piece of equipment. Each square displayed represents one pocket of information being sent by the listed device.
View Status/View Activity (button)	This button toggles the Network Traffic Diagnostics screen between two views. When first accessed, the Network Traffic Diagnostics screen shows the scrolling status bar that indicates that network communication is occurring. Touch the View Status button to view the screen indicating the current status of the equipment (e.g., online, idle, dispensing, etc.). When viewing this screen, touch the View Activity button to return to the first screen.

COIN MECHANISMS

COIN MECHANISMS	***About the Menu Selection***
Coin Diagnostics	**NOTE:** This screen is used for diagnostic and testing purposes only and does not enable or disable coin mechanism operations.
Coin 1 Total	This reading indicates the number of coins inserted during the current test.
Coin 2 Total	This reading indicates the number of coins inserted during the current test.
The BLOCK COIL *button*.	Press this button to test the blocking coil. The blocking coil blocks coins from being inserted.

BILL ACCEPTOR

The Bill Acceptor diagnostics screen(s) is used to set the denominations the bill acceptor will accept, review operation history, and test current operation

BILL ACCEPTOR	*About the Menu Selection*
Settings	
Accept $1	**Selections: Yes or No.** Yes indicates equipment is set to accept $1 bills.
Accept $2	**Selections: Yes or No.** Yes indicates equipment is set to accept $2 bills.
Accept $5	**Selections: Yes or No.** Yes indicates equipment is set to accept $5 bills.
Accept $10	**Selections: Yes or No.** Yes indicates equipment is set to accept $10 bills.
Accept $20	**Selections: Yes or No.** Yes indicates equipment is set to accept $20 bills. **NOTE:** Due to current normal wash prices and the number of coins required to provide returned change, accepting $20 bills is not recommended at this time.
Operating Status	
Status	The information in this field indicates the equipment's current operating condition. **Offline** means the bill acceptor is not communicating with the MDB board.
Last Bill	Indicates the last bill denomination inserted during the current test.
Last Error	Indicates the last bill acceptor error during the current test.
Bill Disposition	Indicates whether bills are being stacked or rejected.
The REJECT *button*	**Selections: Reject or Stack.** Press the button to toggle between selections before testing. While testing, if the button shows "Stack" and a bill is inserted, the bill will be kept. If the button shows "Reject" and a bill is inserted, the bill will be rejected.
Progress History	This field lists recent bill acceptor operation events.
The CLEAR HISTORY *button*	Press this button to erase information in the Progress History field.

COIN HOPPER

COIN HOPPER	*About the Menu Selection*
Status Information	The following information monitors current or recent operation.
Hopper Level	The Hopper Level refers to the supply of coins in the hopper. LOW indicates that the coin supply should be replenished.
Hopper Secure	This indicator implies the hopper can dispense coins. When the circle is red, the hopper is dispensing.
Last Dispense	Indicates the status for the last dispense of coins for the current test.
Coins Dispensed	Incremented based on the number of coins dispensed for the current test.
Hopper Testing	(Only available with OWNER password user rights)
Coins to Dispense	Use the arrows to set the number of coins to dispense for a test.
The DISPENSE *button*	Press this button to dispense the number of coins indicated in Coins To Dispense. **Note:** In order for this button to be enabled, the operator must be logged onto the AMTT CS under the OWNER username and password.

CARD READER

The Card Reader Diagnostics screen is used to monitor and test Card Reader Operation. It is presented in two sections: Status Information and Card Reader Testing.

CARD READER	*About the Menu Selection*
Status Information	
Comm Status	Indicates if the card reader is online or offline.
Reader Status	Determines the state of the reader (e.g., idle, inserted, etc.). Status changes as card reader activity changes.
Card Position	Indicates if the card is inserted, if card reader is holding a card, etc.
Card Type	Indicates credit card or wash club card.
Mag Track 1	**Displays OK or None.** Indicates if card reader was able to read track 1 on the magnetic strip.
Mag Track 2	**Displays OK or None.** Indicates if card reader was able to read track 2 on the magnetic strip.
Last Club Read	**Displays OK or None.** Used for wash club cards only. The display indicates if the card reader was able to read the last wash club card.
Last Club Write	**Displays OK or None.** Used for wash club cards only. The display indicates if the card reader was able to write to the last wash club card.
Card Reader Testing	
Test Read	Used to test Wash Club Card. Insert the card until it locks in the mechanism. The reader attempts to read the Wash Club Card and displays the status in the *Last Club Read* field.
Test Write	Used to test Wash Club Card. Insert the card until it locks in the mechanism. The reader attempts to write to the Wash Club Card and displays the status in the *Last Club Write* field.
Eject	Used to test Wash Club Card. Press the EJECT button to release a Wash Club Card from the mechanism.

PRINTER

The Printer Diagnostics screens are used to test and adjust printer functions.

PRINTER	*About the Menu Selection*
Reset	Press this selection to reset the printer if the printer appears to be operating incorrectly. When the button is pressed you should hear a sound from the printer.
Cut Paper	The paper cutter cuts printed receipts or reports from the paper roll when they have finished printing. Press this selection to test the paper cutter and verify that the cutter head is operating properly. **WARNING! TO AVOID RISK OF PERSONAL INJURY, TURN OFF THE PRINTER POWER BEFORE SERVICING THE CUTTER. THE CUTTER EDGE IS SHARP AND MAY MOVE INADVERTENTLY IF POWER IS ON.**
Line Feed	Press this selection to advance the printer paper.
Print Test	Press this selection to test current print quality. A short report prints and tests all functions.

PUSH FOR ASSISTANCE

PUSH FOR ASSISTANCE	*About the Menu Selection*
Push For Assistance	If the Push For Assistance button in the Options tab under General Setups is ON, then this button will be visible. Press this button and the status infomration will display. If the Push for Assistance option was installed on the AMTT CS, press the button on the AMTT CS to test whether the connection located inside the AMTT CS is correct.

CD-R / RW DRIVE

CD-R / RW DRIVE	*About the Menu Selection*
CD-R / RW Drive	Press this button to display information about the installed drive type and status information on the CD-R/RW disc (if there is one in the drive).

AUDIO

AUDIO	*About the Menu Selection*
Audio	Press this button to test whether the audio works correctly. A sample message plays.

USERS

Selecting **Users** on the Main Menu accesses the **User Setups** screen where security login usernames are added and edited and permission is designated to view selected AMTT CS menus and screens. A User name must be set up on the User Configuration screen for each person who will log into the AMTT CS menu screens and operate the site equipment. Logging into the system allows personnel to perform routine duties that may require access to menu screens and also provides the operator with a record of user access.

USERS	***About the Menu Selection***
The ADD button	The ADD button is provided on the User Setups screen. Touch the **Add** button to Add a User to the Users list. The User Configuration screen appears showing a Users tab and a Permissions tab.. Enter information on these screens as indicated in the field descriptions described below. **IMPORTANT: Any User added will be assigned the same permissions as the user logged into the AMTT CS at the time the new user was added. Permissions may need to be edited.**
The EDIT button	This button is used to change current User information or Passwords. **Editing a User or Password:** 1. First, highlight the name of the User you wish to Edit in the list of Users on the User Setups screen. 2. Touch the **Edit** button to access the User Configuration screen showing the current settings for the User you selected. 3. Touch the **ABC…**button beside the field you wish to change. This places the current setting information for that field in the pane directly above the keyboard. 4. Now touch the Backspace key on the keyboard until the information in the pane has been deleted. 5. "Type" in the new information. 6. When entry is complete, press the Accept button. **Note:** If changing the Password, you must also change the Password Confirm field.
The DELETE button	This button is used to remove a User from the Users list or the User Setups screen. **Deleting a User:** 1. Highlight the name of the User you wish to delete in the list of Users on the User Setups screen. 2. Touch the **Delete** button. A message pops up to ask "Do you wish to delete user *** (selected user appears here)?" and provides Yes and No buttons for your response. 3. Touch the Yes button to delete the user. The name will disappear from the Users list. **Note:** If you touch the No button, the delete action will be cancelled.
Users (Tab)	The Users tab shows the User Configuration screen pertaining to the User name and password.
User Name *(On the User Configuration screen)*	The User Configuration screen appears when adding or editing a User. **Entering a User Name** 1. Touch the **ABC…**button to the right of the Username pane to access the touch-screen keypad. 2. "Type" in the desired user name on the keypad. 3. When entry is complete and shows correctly in the pane above the keyboard, press the Accept button.

USERS *(continued)*	***About the Menu Selection***
Password (On the User Configuration screen)	A Password is assigned to each user name as a security measure so that no one but the User can log in under his or her name. Entering a **Password** 1. Touch the **ABC…**button to the right of the Password pane to access the touch-screen keypad. 2. "Type" in the Password. 3. When entry is complete, press the Accept button. **Note:** The password appears as *'s in the pane above the keyboard.
Password Confirm (On the User Configuration screen)	The Password Confirm is just what it says -- Re-enter the password in the Password Confirm field as described above to verify the password is entered as desired. **Note:** The password must be re-entered in the Password Confirm field exactly as it was entered in the Password field.
Permissions (Tab)	Permission refers to the right to access. The Permissions tab allows the owner/operator to designate in detail which screens each user can view. The operator can set permissions so that site personnel can access the screens necessary to perform their duties effectively while blocking access to screens containing sensitive equipment settings and confidential business information. Permissions are divided into categories. A category's permission may be designated as a whole by touching the box to the right of the selection to insert an "**X**." The X indicates that the user may access any information screens in that category. The **Advanced** button to the right of each category name allows the operator to designate access to individual screens within a category rather than the entire category. When the Advanced button is pressed, the category's topics are listed individually. The operator may designate access permission by inserting an "X" in the box beside any topic name. In this way, only selected screens in the category are accessible for the user. The Permissions categories and their advanced selections are listed below.
Reports	**Advanced Selections:** View Reports, View User Reports, Clear Reports, Clear User Reports, Print Reports, Print User Reports, Transactions, Passcodes.
Diagnostics	**Advanced Selections:** Coin Mechs, Coin Hopper, Bill Acceptor, Sensors/Relays, Card Reader, Printer.
User Accounts	**Advanced Selections:** Add Users, Delete Users, Edit Users, Modify Own, View/Modify User Names, View/Modify Passwords, View/Modify Permissions, View/Modify Passcodes.
System Setups	If the System Setups permissions is enabled ("X"), the following permissions settings are visible.
General Setups	**Advanced Selections:** RykoNet Setup, Options, Coin Settings, Bill Acceptor, Card Reader, Printers, Environment, Timers/Receipts, Shockwave Video, CD-R/RW Backup.
Carwash Options	**Advanced Selections:** General Setups, Arming, FreeStanding Dryer, Select-A-Wash, Variable Wash Speed.
Wash Packages	**Advanced Selections:** Package Name, Price, Package Options, Wash Menu.
Card Processing Setups	**Advanced Selections:** Credit Card Settings, SS Terminal Settings, Wash Club Card Settings.
Wash Sets	**Advanced Selections:** Create New, Delete, Edit, Make Current..

OPERATION

DESCRIPTION OF OPERATION

BASIC ORDER OF OPERATION

The basic information presented in this manual is pertinent to most locations, however the messages and screen displays may not be exactly as described. Both the messages and the screens displayed are subject to minor changes depending on the wash equipment installed at the location, the AMTT CS program or options installed, and the system settings entered at the location.

VEHICLE DETECTION

A photo-eye transmitter and receiver are mounted in the AMTT CS pedestal or, in wall-mounted units, in the wall beneath the AMTT CS . The transmitter sends out an infra-red beam which strikes an object (generally this will be a vehicle pulling up in front of the coin box) and then bounces back to the receiver. If the beam reaches the receiver, the object or vehicle is detected. **Note:** In the event vehicles are not detected as described, adjustments may be required. Refer to Photoeye Cleaning and Adjustment in this manual.

TOUCHSCREEN

Note: When the welcome video has been playing for a number of minutes, the touch screen can go into a "sleep" mode. If this occurs, 2 touches on the screen may be required to activate it.

INITIAL ENTRY SCREENS

The information presented is pertinent to most locations. Depending on the options installed and the AMTT setups, one of the following initial entry screens displays for the customer to arm the wash. The welcome video displays when there is no activity at the car wash coin box. An audio greeting message plays when the photoeyes are blocked.

Note: The screen displays and audio messages shown below and the order in which they occur may vary depending on which payment option is chosen, if an upgrade is desired for the wash, the type of vehicle wash system and options installed, and the traffic in the vehicle wash bay.

Entry Screen

An entry screen displays when a vehicle is detected and the customer has touched the screen.

Note: The screen at right displays when the AMTT CS accepts 5-digit codes, money, wash club cards or credit cards to arm the wash. The screen layout and options will vary according to the arming options installed on the AMTT CS.

At this time the customer may choose a payment option (if more than one option is offered). They may:

1. Enter a 5-digit code using the numbered keypad; (the code is prepurchased in the office or kiosk or as part of a fleet account)

or

Deposit money (if coin and/or bill accept options are installed and appropriate AMTT CS setups have been completed);

or

Insert a Wash Club card (if a card reader is installed and appropriate AMTT CS setups have been completed);

or

Insert a Credit Card (if a card reader is installed, appropriate AMTT CS setups have been completed, and credit card authorization has been enabled).

2. If entering a code, touch the START OVER button to clear the code and begin again. When the code, has been entered correctly press the TOUCH HERE TO VIEW MENU button to see the Wash Selection/Upgrade screen;

or

If purchasing the wash with money, press the TOUCH HERE TO VIEW MENU button to see the Wash Selection/Upgrade screen.

Audio Message: "Thank you for using our automatic carwash. Please enter your 5-digit code or deposit money or insert your card for a wash."

Wash Menu Upgrade Screen

This screen displays after the user enters money, enters a code or inserts a card.. A different wash package is displayed on each of the 4 "buttons".

When depositing money:

A cash customer may select a wash now by touching the button beside the desired wash. The selected wash button will light. The Amount Tendered updates as money is entered to indicate how much has been deposited. When the amount deposited is equal to the indicated wash price, the displayed screen will change to indicate further instructions or to require additional selection input from the customer.

When entering a code:

If a code number was entered, the prepaid wash package selection button is highlighted and blinking on the display when this Wash Menu screen displays.

Upgrading to a higher value wash package:

After entering a code for a wash purchased in the office or kiosk or depositing money at the coin box for a particular wash, the customer may decide to upgrade to a higher value wash package. The button for the wash that is currently purchased is lit and blinking. At this time the customer can choose to upgrade from the current purchase, by touching the button for the higher value wash and depositing additional money in the amount indicated in the pane to the right of the button. The Amount Tendered at the bottom of the display updates to indicate how much money has been deposited.

Audio Messages: The following messages may play while entering money or upgrading the wash.
"Please use correct change only." (This message alerts the customer that the hopper is unable to deliver change.)
"Quarter accepted."
"Bill accepted."
"Please deposit additional money for the selected wash."
"Thank You. For an upgrade please deposit additional money."

Select Wash Type **(Select-A-Wash Systems Only)**

This screen displays only if the AMTT is set for Select-A-Wash operation. This screen displays before the Wash Selection / Upgrade screen only when a code (not cash or cards) is entered.

Press the Touch Free Wash button to select a spray wash.

Press the FoamBrite button to select a wash with the FoamBrite washers.

Audio Message: "Please select a Touch Free or FoamBrite wash."

Depending on the type of wash equipment installed, one of the following screens will display next. However, if the wash is currently in use, the Wash in Use screen may appear.

Wash In Use

This screen displays when the vehicle wash system is in use and the current wash is in escrow. Watch the display for further instructions when the wash bay is no longer occupied.

Audio Message: "Thank You. Please wait, the car wash is in use."

PLEASE WAIT

The Carwash is in Use

Enter Wash **(For Rollover Wash Systems Only)**

This screen displays when a rollover wash system is ready for use and the customer may drive into the bay.

Audio Message: "Thank you. Please drive into the wash slowly and stop when the stop sign lights up."

1. **Turn OFF radio to LOWER power antenna**
2. **Windows UP**
3. **Leave wipers OFF**
4. **Enter wash slowly**

Enter the Carwash

Enter Wash **(With Bug Deflector)**

This screen displays when a rollover wash system is ready for use and the customer may drive into the bay. The touch-button on this screen allows the customer to indicate that a bug deflector is installed on their vehicle. When pressed, equipment operation alters to avoid contact with the bug deflector.

Note: The Follower Drop Disable option must be installed and appropriate setups must be completed.

TOUCH Here if Your Vehicle Has a Big Deflector

1. **Turn OFF radio to LOWER power antenna**
2. **Windows UP**
3. **Leave wipers OFF**
4. **Enter wash slowly**

Enter the Carwash

Start Wash(Conveyor Systems Only)

This screen displays the AMTT is operating with a conveyor wash system. The customer must touch the START button to activate the conveyor.

Audio Message: "Please press the START button."

1. Turn OFF radio to LOWER power antenna
2. Put vehicle in NEUTRAL.
3. RELEASE brakes.
4. DO NOT steer.
5. Touch START button.
6. Windows UP

Once the Start button has been pressed, the following screen displays.

Start Wash(Conveyor Systems Only)

This screen displays the AMTT is operating with a conveyor wash system and the customer has pressed the START button.

Audio Message: "Remember to place the vehicle in neutral. Release the brake. Do not steer. Let the conveyor ease you through the wash. Roll up your windows."

ADDITIONAL SCREENS THAT MAY DISPLAY

The screens below are displayed in special circumstances (i.e. , error conditions, when special cards are used, for specific or optional equipment or when specific conditions are met or occur during operation) and are not always part of the normal operating displays.

Invalid Code

This screen displays only if the entered code is invalid. A code is invalid when:

- the number of days the code is valid have expired.
- the code number has already been used to issue a wash.
- the code number entered has not been assigned.

The code may have been entered incorrectly. Check the code issued on the wash ticket.

Code: 12345
is an Invalid Code. Please re-enter or contact attendant.

TOUCH Here To Re-Enter

Wash Closed

This screen displays if the wash has been disabled for service or other reasons. It indicates loss of machine control power or the Code-A-Wash IV detection on the network.

To initiate this display, press the Emergency Stop button or turn off power to the car wash equipment.

To restore the equipment to operation status, pull out the Emergency Stop button or restore power to the Code-A-Wash.

SORRY

THE CARWASH IS
TEMPORARILY CLOSED
PLEASE TRY AGAIN
LATER

Not Authorized

If a Wash Club inserted is not valid at the location and will not arm the wash, the screen at right is displayed.

Please Remove Card

Your card is not authorized
for this location.

Contact Cashier for further Assistance.

Select for a Receipt

This screen displays if the AMTT has been setup to prompt for a receipt and the AMTT has a printer option.

Press **YES** to print a receipt.

Press **NO** if no receipt is desired.

Recorded Message: "Please Select for Your Receipt".

Would you like a Receipt?

Yes No

Please Wait

This screen displays while the AMTT is processing a receipt (if the AMTT has a printer option).

Recorded Message: "Please wait for your receipt".

Please Wait…

Credit Read

This screen appears when the AMTT CS has finished reading the information on the card.

Please Remove Your Card

Credit Card Charge Cancel

This screen appears if a Credit Card Charge has been cancelled by the customer.

Transaction has been canceled.
No charges have been applied to your credit card.

Charge Denied

This screen appears if a credit card type that has not been authorized for use with the AMTT CS is inserted (for example, the system has been set up to receive only Master Card and Visa credit cards, but a Discover card has been inserted).

Charge Denied

Discover Not Accepted

Credit Error

This screen appears if:

- The card reader is having problems reading the customer's credit card.

Unable to Accept Credit Card

Card could not be read correctly. Please try again.

Contact Cashier for Further Assistance

Credit Error

This screen appears if:

- A customer inserts a credit card into an AMTT CS that is not setup to accept credit cards.

Unable to Accept Credit Card

Credit Cards are not accepted at this location.

Credit Authorization

This screen appears when the AMTT CS is checking the system for approval of the charge.

Authorizing Charge

Please Wait

Credit Authorization Timeout

This screen appears if the AMTT CS software cannot communicate with the credit charge server software.

Unable to Authorize
Could not authorize charges at this time.

Please try again later.

Prompt User

This screen appears if a credit card is inserted when the Touch And Go Credit Card Acceptance system option is installed. Press YES to generate a code that may be used to activate other equipment or purchase vend items at this location. Charges for each service or vend item purchased using the code are charged to the customer's credit card.

Would you like a code for other wash services at this site?

Additional services you use will be charged to your credit card.

YES **NO**

CARD READER OPTION

A Card Reader mechanism is required for the AMTT CS to accept credit cards or wash club cards. It reads the information contained on the card and interfaces this information with appropriate programming and site equipment. There are two types of card readers: The SCI and the PAN. Both are described below.

SCI CARD READERS

The SCI card reader reads and writes to IC chips on “WASH CLUB” cards and also reads credit cards. The SCI card reader is used primarily to process Wash Club Cards.

Note: While the SCI reader also accepts credit cards, it 's operation is sensitive and requires the user to follow instructions exactly.

A locking mechanism holds inserted credit cards in place for a short span while they are processed. When done processing, the lock lets loose and allows for the card to be removed. The card will not come free until it is released by the mechanism.

IMPORTANT: IF A POWER FAILURE OCCURS WHILE A CARD IS INSERTED, THE CARD MAY BE LOCKED IN THE CARD READER. CAREFUL REMOVAL OF THE CARD IS NECESSARY TO AVOID DAMAGING THE READER'S LOCKING MECHANISM. *TO FREE THE CARD:* **OPEN THE DOOR OF THE AMTT AND PRESS THE BUTTON LOCATED ON THE BACK OF THE CARD READER TO MANUALLY RELEASE THE LOCKING MECHANISM. THEN REMOVE THE CARD.**

When removing the card, pull it straight out in a smooth motion. Bending the card during removal may cause the reader to misread the card. If this occurs, an error message appears on the display. Refer to Card Error Display Screens And Instructions.

PAN CARD READERS

The PAN card reader reads credit cards only and does not work with "WASH CLUB" cards. The user inserts and removes the card and is able to enter and remove a credit card with minimal difficulty. **Note:** This card reader cannot be upgraded to read and write to "WASH CLUB" cards.) The instruction label at right appears on the AMTT face when Pan card readers are installed.

CARD READER CLEANING

Monthly cleaning of the Card Reader head is recommended to eliminate reading errors and prolong the head life. A card reader cleaning card, inserted a few times into the card mechanism like any wash club or credit card, removes contaminants from the head safely and effectively in moments. Follow package directions. Five cleaning cards are supplied with each new coinbox.

To reorder:

Description	***RYKO* Part No.**
Card Reader Cleaning Card	24056-000

THE CARD READER AND CREDIT CARDS

Operation of the Card Reader with Credit Cards requires specific Card Reader settings completed in the AMTT CS and the Credit Charge Server.

Prior to installation, the operator obtains a merchant account at their financial institution and completes an application process with a credit card authorization service. The information returned from the authorization service with application approval is used to configure the Credit Charge Server that manages charge transactions and submits them for authorization.

CUSTOMER OPERATION

Note: The following instructions are general and provide basic operation procedures. The instruction and operation screens presented will vary depending on installed options and customer responses.

1. The customer touches the color touch screen to present the Enter Credit Card instruction screen.
2. The customer inserts a credit card (Visa, MasterCard, American Express, or Discover) into the vertical card reader slot on the face of the AMTT CS below the color touch screen. **Note:** The card must be inserted as illustrated on the label beside the slot for the card reader to function.
3. The customer removes the card as instructed.
4. The customer follows touch-screen and audio instructions to make a wash selection and enter appropriate selections.
5. The customer is instructed to enter the bay or press the START button (conveyor systems only).

CREDIT CHARGE SERVER

The Credit Charge Server manages the charge card transactions made at a bay's coin box or at a self-serve credit card terminal. The server organizes credit transactions and submits them via modem to a processing service for authorization. Transactions may be grouped into a batch and sent for authorization automatically, at a specific time of day, periodically, or when a pre-set number of transactions have occurred. Auto Settlement settings determine when and how funding settlement of charge transactions occurs and how the Credit Charge Server will handle settlement processing failures and store settled batch information for future reference. The Credit Charge Server maintains a record of all credit charge activity including a list of open charge transactions, batches sent for authorization and settlement, and a hot list of previously denied cards. The Credit Charge Server even allows the operator to determine when and how often to retry to submit a batch if modem communication with the processing service should fail.

Additional information about the Credit Charge Server including setup, operation, and troubleshooting are available on the Credit Charge Server Setup Configuration document in the **Drawings** section of this manual.

THE CARD READER AND WASH CLUB CARDS

Operation of the Card Reader with Wash Club Cards depends on AMTT CS setups and the information programmed into and retained on a plastic card similar to a bank or credit card. Each card is programmed using a special manager's card that is inserted into the AMTT CS' credit card slot to access the programming screens. When programmed, a Wash Club Card contains information pertaining to card identification and a prepurchased value that indicates a cash, credit, or wash package balance. The Card Reader allows insertion of these preprogrammed club cards into the AMTT CS to receive a vehicle wash. The card reader then reads the information on the card and informs the AMTT CS which type of wash to activate and the number of washes, credits, or cash available on the club card. With each wash used, the Card Reader deducts the value of that wash from the total value remaining on the card. The new value information is then retained on the card for its next use. When the full value of the card is depleted, the card may reprogrammed and distributed for continued use.

Other features include:

- Card Reader Option programming allows managers to program club cards for use at multiple wash locations. This feature is also convenient for vehicle fleet washing.
- A Manager Menu screen displays the wash club cards programmed.
- Simple steps allow programming of multiple cards in moments.
- Several display screens are specially tailored for Wash Club Card operation on the AMTT. See these screens in the Description of Operation information in this manual.

THE MANAGER'S CARD

The Manager's Card allows controlled access to Wash Club Card programming functions and to report screens pertaining to programmed cards. This card is required to prepare programmed wash club cards. The Manager's Card should be kept in a secure location that is convenient to the operator.

IMPORTANT: BECAUSE THE MANAGER'S CARD ACCESSES PROGRAMMING SCREENS THAT PERTAIN TO THE LOCATION'S SALES AND REVENUE, ONLY AUTHORIZED PERSONNEL SHOULD HAVE ACCESS TO THIS CARD.

Each AMTT CS is shipped from the factory with a random Group ID number that identifies where Wash Club Cards were generated. This number is written to the Manager's Card for that location and is needs to be imprinted into all Wash Club Cards that are programmed. In this way, the Wash Club Cards are limited to the AMTT CS where they were programmed. **Note:** To program Wash Club Cards for use at more than one AMTT CS at a wash location or at additional wash locations, refer to Group ID information under Wash Club Card Programming in this manual.

IMPORTANT: *DO NOT* CHANGE THE GROUP ID NUMBER UNLESS IT IS ABSOLUTELY NECESSARY (E.G., DISCOVERY OF UNAUTHORIZED PROGRAMMING OF CARDS, ETC.. ALL CARDS THAT WERE PROGRAMMED BEFORE THE NUMBER WAS CHANGED WILL BECOME INVALID.

MANAGER'S CARD REPLACEMENT

Occasionally a manager's card must be replaced due to wear. A special replacement manager's card is sent from the factory. When the replacement card is inserted in the AMTT CS, the group ID number from the AMTT CS database is written onto the card.

IMPORTANT: Keep a record of your group ID number!!! *RYKO* does not maintain group ID number records.

MANAGER'S MENU

The Manager's Menu is used for programming Wash Club Cards and configuring the AMTT CS settings required to accept them.

TO ACCESS THE MANAGER'S MENU

Insert the Manager's Card into the credit card slot on the AMTT CS and leave it in the slot. The Manager's Menu appears on the display. Selections on the Manager's Menu are explained below.

IMPORTANT: WHEN FINISHED PROGRAMMING, BE SURE TO REMOVE THE MANAGER'S CARD.

WASH CLUB CARD PROGRAMMING

MENU SELECTIONS	***About the Menu Selection***
CHANGE CONFIGURATION	
General (Tab)	All settings on this screen are required for club cards to operate on the AMTT CS.
Group ID	A random Group ID number is assigned to each AMTT CS upon leaving the factory. This number is shown in the Group ID pane. **Note:** To program Wash Club Cards on this AMTT CS (host) for use at any other AMTT CS (remote), the Group ID number from the host unit where the cards were programmed must be entered into this field (Group ID) on all other AMTT CS' where the cards should be accepted. **IMPORTANT: BE CAREFUL! If the AMTT CS' Group ID number is changed, all wash club cards previously programmed on that AMTT CS will become invalid.** **To change the group ID number:** Touch the **123…** button to the right of the pane to open the numeric keypad. "Type" in the desired number and press Accept.
Accept Wash Club Cards	**Selections: Yes or No.** Touch the button until the desired selection is displayed.
Print Receipt	**Selections: Never, Always, Prompt.** Touch the ▼ to the right of the pane. A drop-down menu appears showing the selections. Touch the desired selection so that it is highlighted. Select **Never** if no printer option is installed or if receipts should not be printed. Select **Always** to print a receipt for every wash club card transaction. Select **Prompt** to display the question "Do you want to print a receipt?"
Credit Settings (Tab)	These settings determine the number of credits deducted from a Wash Club Card credit balance when the card is used to arm a wash.
Level 4 Credits	This setting determines the number of credits deducted from the Wash Club Card credit balance for the highest value wash.
Level 3 Credits	This setting determines the number of credits deducted from the Wash Club Card credit balance for the second highest value wash.
Level 2 Credits	This setting determines the number of credits deducted from the Wash Club Card credit balance for the third highest value wash.
Level 1 Credits	This setting determines the number of credits deducted from the Wash Club Card credit balance for the lowest value wash.

MENU SELECTIONS	*About the Menu Selection*
PROGRAM CARDS	Selections on both the Type/Value and Expiration tabs are required to program Wash Club Cards. Refer to the instructions below.
Type/Value (Tab)	**Selections: Cash, Credit, Wash Pkg.** Touch the ▼ to the right of the pane. A drop-down menu appears showing the selections. Touch the desired selection so that it is highlighted. Three types of specific wash cards may be purchased by the customer for future wash transactions. Each type of card is preprogrammed to activate the wash, deduct the value of the wash and recalculate the remaining balance on the card as described below. If set to **Cash** a Wash Club Cash Card for a specific dollar amount that is programmed on the card as a cash balance. A cash value is assigned to each wash package to be deducted upon use. This card may be used to purchase any one of the wash packages. **Value setting Range: $0.00 to $500.00** If set to **Credit**, a Wash Club Credit Card that retains a credit balance is programmed. A credit value is assigned to each wash package to be deducted upon use. This card may be used to purchase any one of the wash packages. **Value Setting Range: 0 to 500 credits** If set to **Wash Pkg** a Wash Club Wash Card retains a balance of prepaid wash packages is programmed. At the time of programming a wash package is selected. Inserting the card arms the system for the programmed wash package only. **Value Setting Range: 0 to 500 washes** **Note:** This selection is often used by operators when they wish to provide customers with a card containing one or more free washes.
Expiration (Tab)	**Selections: Never expires, Expire on date, Expires after first use.** Touch the circle to the left of the desired setting to select it. A dot will appear in the circle to indicate the selection. ~~~~~~ Select **Never expires** if the card balance may be used at any time and will not expire. No further settings are required. ~~~~~~ Select **Expire on date** when the card balance should expire on a specific date. Set the 'Expire on date' in the pane on the lower part of the screen as follows: Touch the down arrow to the right of the pane. A calendar appears. Touch the desired date so that it is highlighted. ~~~~~~ Select **Expires after first use** to determine how many months after the first use the card will expire. Set the 'Months Valid after first use' setting in the 'Months' pane on the lower part of the screen as follows. Touch the 123… button to the right of the pane to access the numeric keypad. Enter the number of months the card should remain valid and press Accept.

CHANGE HOPPER OPTION

If installed, a change hopper can disperse change to the customer for a wash package purchase. **Note:** The coin box is not designed as a change maker. A wash package must be purchased to receive change.

The change hopper can hold up to $400.00 in quarters, or a similar amount of other coins. The program in the coin box allows the disbursement of no more than the amount of money inputted by the customer minus the lowest price wash. This should keep the system from being “JACKPOTTED” by a customer. The change hopper must be filled by the location manager/ cashier.

Change from a coin acceptor will not go into the hopper. These coins are stored in a separate bin on the door of the coin box. This is done to assist in the accounting of the cash at the coin box. Change is returned to the customer through the rounded change cup located on the lower right side of the door. A security flapper door is installed on the change cup to prevent a hand from reaching too far up into the coin box. The coin box door must be tightly screwed closed for the hopper to operate properly. If the door is not closed tightly, the coins could slip behind the coin chute and not deliver to the change cup properly.

CHANGE HOPPER PREPARATION

When adding coins to the change hopper when it is empty, shake the hopper gently to settle the coins into position for easy and prompt dispensing. If coins take too long to dispense, a coin dispensing timeout limit (necessary for preventing "jackpotting" of the hopper) prevents further coins from dispensing and may short a customer of change due during the first few transactions after adding change to the hopper.

CHANGE HOPPER REMOVAL/INSTALLATION

1. Remove the 2 plug locks from the front of the coin box door.
2. Insert the allen head wrench into each lock opening and unscrew the two door securing bolts.
3. Swing the coin box door open.
4. Slide the hopper forward until it becomes loose.
5. Add change or count the change in the hopper as required. Removal of the locking cover may be required if this option is installed.
6. Slide the hopper back onto its slide track until the connector on the back of the hopper seats properly into the connector plug.
7. Close the door.
8. Using the allen head wrench, tighten the two bolts until they are snug.
9. Reinsert the two plug locks.

BILL ACCEPTOR OPTION

RYKO coin boxes use a Mars bill acceptor that will hold up to around 200 bills. Depending on which version of the bill acceptor is ordered and the System Setups settings at the location, the AMTT CS will accept $1, $2, $5, $10, or $20 U.S. bills. A label on the coin box face informs the customer which bills are acceptable. When a customer inserts a bill into the acceptor (may be inserted in any direction), the bill is held in escrow for a few moments while the software program determines if the bill is the correct amount or if the bill is too large to be accepted. **Note:** If the customer has already inserted the full amount for the maximum wash that can be purchased, no additional bills will be accepted. This prevents use of the coin box as a change machine.

If the bill is accepted, the amount deposited is recorded in the AMTT CS against the purchase of the requested wash. If the bill is rejected, it is returned to the customer -- held partway out of the bill slot by a friction roller so the customer can retrieve it.

Bill Acceptor settings are located in the General Setup section of the Systems Setups Menu.

IMPORTANT! RYKO PROGRAMMING RECOMMENDS SETTING THE "COIN BOX FULL - DOLLAR" VALUE TO $200.00 OR LESS TO REDUCE LOSS IN THE EVENT OF VANDALISM.

REMOVING MONEY FROM THE BILL ACCEPTOR

The bill acceptor will hold up to around 200 bills in a bill stacker. **NOTE:** The owner/operator should empty the bill acceptor often enough to reduce loss in the event of vandalism and to prevent malfunction if the bill stacker becomes too full. If a malfunction occurs the STATUS light on the bill acceptor will blink and the unit will shut down.

1. If the bill acceptor has a padlock on it, remove the padlock.

2. Lift the top door of the stacker or remove the stacker (refer to the Mars (MEI) 2000 Series Bill Acceptor Maintenance/Diagnostics Instructions document in the **Drawings** section of this manual).

3. Remove the bills from the stacker.

4. Press the stacker firmly in place. Be sure the catch holds firmly.

5. Reinstall the lock (if present).

For additional information on general maintenance, cleaning, and troubleshooting of the dollar bill acceptor, refer to the Mars bill acceptor field service manual included in shipment with the coin box.

BILL ACCEPTOR MAINTENANCE

If a bill acceptor is installed, it should be cleaned a minimum of once per month. Cleaning properly can prevent equipment failure, save on repair time and costs, and increase the life of the equipment.

TO CLEAN THE BILL PATH:

1. Lift the bar at the bottom of the bill acceptor clear of the notch where it rests and slide the bill path assembly out.

2. Moisten (wring out excess water so the cloth is only damp and not dripping) a clean soft cloth with water or a solution of water and a mild detergent (dishwashing soap).

IMPORTANT: *DO NOT* **USE A STANDARD WINDOW CLEANER PRODUCT. THESE PRODUCTS CAN DAMAGE THE PLASTIC WINDOWS.**

3. Gently wipe the photoeyes and wheels inside the assembly.

4. Slide the bill path back into place and reinsert the bar into the notch.

TO CLEAN THE BILL STACKER:

1. Unlock and remove the padlocks holding the hinges on the back of the bill acceptor in place.

2. Remove the hinges and pop off the back of the bill acceptor.

3. Moisten (wring out excess water so the cloth is only damp and not dripping) a clean soft cloth with water or a solution of water and a mild detergent (dishwashing soap).

4. Gently wipe the inside surface of the stacker and the belts.

5. Replace the back panel of the bill acceptor and reattach the hinges.

6. Reinsert the padlocks into the hinges and lock.

COIN SWITCH OPTION

If the coin switch option is installed, a coin switch of some type will be installed to the right of the color touch screen display. In the U.S. this will generally be a quarter acceptor mechanism. On the back side of the door, below the coin mechanism is a coin holder. All coins accepted into the coin box are held in this coin holder until removed by the station personnel. The coin holder is attached to the back of the door with a spring clip which allows the coin holder bin to be removed. It is suggested that the station personnel remove coins from the coin holder on a regular basis to minimize the attractiveness of theft or damage to the coin box. A blocking coil is installed on the coin switch to prohibit the insertion of coins when the software in the coin box determines that coins should not be inputted.

INTERCOM OPTION

If the intercom option is installed, a "Push for Assistance" push-button switch is installed on the coin box door. This is an assistance switch which notifies the cashier/manager in the kiosk that the person at the coin box wishes to speak with them. The speaker used for the audio system is used for the speaker and

microphone of the intercom system.

For the Push For Assistance button to operate, it must be enabled in the General Setup section of the System Setups menu.

MAINTENANCE

WARNING! -- ELECTRICAL SHOCK HAZARDS!!!

- **COMPONENTS OF THIS EQUIPMENT PROVIDE SUFFICIENT VOLTAGE TO SHOCK SEVERELY. DISCONNECT ALL POWER SUPPLIES TO THE EQUIPMENT BEFORE PERFORMING SERVICE.**
- **TOUCH-SCREEN COMPONENTS INSIDE THE CABINET PROVIDE SUFFICIENT VOLTAGE TO SHOCK SEVERELY. IF POWER MUST BE ON TO COMPLETE ANY PROCEDURE, TAKE ESPECIAL CARE TO AVOID TOUCHING THE BACKLIGHT DISPLAY.**

CAUTION: THE AMTT CS CONTAINS ELECTROSTATIC SENSITIVE DEVICES. WEAR AN ELECTRIC-STATIC DISCHARGE GROUND WRIST STRAP WHEN SERVICING INTERNAL COMPONENTS TO PREVENT DAMAGE TO EQUIPMENT.

MAINTENANCE SCHEDULE

Regular maintenance is advised to ensure proper operation and prolong the life of this equipment.

DAILY MAINTENANCE

1. Check the paper supply and replenish as needed (if Printer Option is installed). Refer to Printer Option information in this manual.
2. Check the change hopper to ensure the coin supply is sufficient to make change for the day. Refer to Change Hopper Option information in this manual.
3. Remove cash from the coin box and bill acceptor. Refer to Cash Removal information in this manual.

WEEKLY MAINTENANCE

1. Clean the internal components of the bill acceptor. Refer to Bill Acceptor Option information in this manual.
2. Clean the touch-screen display. Refer to Display Screen Cleaning information in this manual.

MONTHLY MAINTENANCE

1. Clean the Card Reader head with the cleaning card. Refer to Card Reader Option information in this manual.
2. Clean the circulating fan filter. Refer to Circulating Fan Filter Cleaning instructions in this manual.
   Note: If conditions are particularly dusty the filter may require more frequent cleaning.

READ THIS BEFORE REMOVING POWER!

WARNING! BEFORE INTERRUPTING POWER TO THE AMTT CS, SHUT DOWN PROCEDURES MUST BE COMPLETED TO ENSURE THE OPERATION PROGRAMS ARE PROTECTED. REMOVING POWER BEFORE COMPLETING SHUTDOWN PROCEDURES MAY CAUSE EQUIPMENT TO MALFUNCTION OR FAIL TO RESTART.

When removing power to the AMTT CS you must:

1. **Go to the Systems Setup Menu.**
   On the Enter Code screen, enter #2723* to access the Main Menu. When the menu displays, press System Setups. The System Setups Menu displays.

2. **Press the Shut Down button.**

3. **Wait for the message.** A message displays, to indicate that all programs have closed properly.

4. **Remove power.**

SECURITY KEYS

There may be three different types of keys that lock the door and various components of the AMTT CS coin box.

IMPORTANT: The owner/manager must keep close account of the coin box keys at all times!! The key number for the key that allows access to the coin box must be recorded by the owner/manager in case duplicates are needed. **RYKO *DOES NOT* KEEP RECORDS OF KEY NUMBERS!!**

One key allows access to the Allen Head bolts that secure the coin box door. This key should be kept in the cash register or other accessible location so it is immediately available in the event that servicing is necessary.
The second key is flat and locks and unlocks the dollar bill acceptor bill holder (if installed).
The third key is a flat padlock key that locks the top of the change hopper (if the change hopper and the locking cover options are installed).

The manager (or other authorized personnel) should protect these keys to allow limited access to the money accumulated in the bill acceptor and/or the change hopper. The keys should only be given to service personnel when the dollar bill acceptor or hopper requires maintenance or servicing.

CASH REMOVAL

RYKO recommends frequent removal of money from the coin box and the bill acceptor. For security reasons (i.e., possible vandalism or theft) consider using a staggered and irregular schedule when removing money.

When money is removed from the coin box, total and clear out the coin box totals in the Code-A-Wash System console. The totals printed out should equal the cash removed from the coin box and dollar bill acceptor.

See information pertaining to the **Bill Acceptor Option** and the **Coin Hopper Option** in this manual.

TOUCH-SCREEN MAINTENANCE & SERVICE

CLEANING THE SCREEN

In order for the instructions and menus on the AMTT CS display window to remain legible, it is necessary to clean the screen regularly. Approximately once a week clean the display window using either a clean cotton cloth or lens paper and a standard ammonia based glass cleaner (e.g., Windex).

INITIALIZING & SETTING UP THE TOUCH SCREEN

Instructions are provided for procedures required to set up the color touch-screen in the event it is not operating correctly due to misalignment or if the screen is being replaced. Refer to the Instructions, Touchscreen Initializing document in the **Drawings** section of this manual.

CIRCULATING FAN FILTER CLEANING

Once a month (or more if conditions are particularly dusty) it is necessary to clean the circulating fan filter. In warm weather this can prevent the display from overheating. When the heater is operating, this allows the warm air protecting the system to circulate.

To Clean:

1. Open the door on the rear of the AMTT CS pedestal.
2. Look upward and locate the square fan guard on the top of the pedestal. This guard holds the filter.
3. Pull gently on the fan guard until it snaps loose from the holder. The filter should also come with it.
4. The filter lies loose in the fan guard. Remove it and shake out dirt.
5. Replace the filter in the fan guard.
6. Resnap the fan guard into the holder in the pedestal. There should be two audible clicks to indicate that the guard has attached correctly.
7. Close and lock the pedestal door.

CIRCULATING FAN FILTER AND GUARD REPLACEMENT PARTS

In the event the fan guard or filter becomes worn or damaged, the following replacement parts are available.

Supplier	Part No	
RYKO	15544-006	Fan Guard / 92 mm, filter

INSTALLING SOFTWARE UPGRADES

Upgrades to AMTT CS software may be required from time to time. This process only takes a few minutes and is mostly automatic. Follow the instructions below.

Note: Do not disconnect power before attempting this service procedure. Power is required.

1. Enter **# 2 7 2 3 *** on the code entry screen. The User Login screen appears.
2. Enter the User name and Password. Then press Login. The Main Menu appears.
3. On the Main Menu, touch the SYSTEM SETUPS button. The System Setup Menu appears.
4. Press the EXIT TO BOOT APP button.
5. Press the UPGRADE button. A message box appears instructing to insert the disk containing the new software into the AMTT CS' CD ROM drive. **Note:** if you wish to discontinue the software upgrade procedure, you can press CANCEL now.
6. Open the AMTT CS door.
7. Press the button to the right of the CD ROM Drive to open and insert the diskette with the label-side up.
8. Press the button to the right of the CD Rom Drive to close the drive and accept the disk.
9. On the Touch-Screen, touch the OK button in the message box with the Upgrade instructions.
10. The installation will begin to run automatically and installation "wizard" instructions will appear. Occasionally the wizard will requiring you to press a highlighted NEXT button.
11. When installation is complete, the wizard instructions will present a FINISH button. Press the button.

Next, you should see a small window pop up entitled *AMTT-CS Database Conversion*. This is the result of the software determined that a newer version of the Microsoft Access database file used by the AMTT-CS application is needed. This update will happen automatically. On the application you will see “Current Version: <current version>” & “Updating to: <newest version>” with a progress bar underneath. Depending on the amount of data that is stored in the AMTT.mdb file for the particular AMTT-CS the software is being installed on this process could take a few minutes or maybe longer depending on the size of the AMTT.mdb file. If the AMTT.mdb file is large, it may look like the application is hung and nothing is working but it is NOT. You must let it complete. Otherwise the AMTT-CS application will not work properly. All previous critical information currently stored in the database will be transferred into the new database. When it completes the installation will exit to the Windows desktop.

12. Installation is complete. Remove the disk and save it in a safe place.
13. Reboot the system to enable the software upgrade.

CREATING A CUSTOM WELCOME/INSTRUCTION VIDEO

If desired, operators may choose to substitute the AMTT CS' standard welcome/instruction video presentation with a customized video. Once a customized video is created, the substitution process is relatively simple. Refer to the instructions below. **Note:** While there is no limit to the possible length of the video presentation file, the welcome and instructions to assist customers in completing wash selection procedures should probably take no longer than 60 seconds. Ryko currently controls the animation looping in the idle mode.

REQUIREMENTS AND HOW-TO NOTES

Macromedia Flash 5.0 is required for operation.

Note: The AMTT CS does not currently support Macromedia MX Flash, or any other type of video (i.e. AVI, mpeg, mp3, or any DVD format).

Complete the process below to allow the customer's touch on the screen to cause the video to stop playing and the display to show a different operational screen.

Make the first layer (the layer closest to the background) of the new file into a button with the following on click events:

1. **Stop** (This stops the animation from continuing).
2. **Stop ALL** (This stops all background music from playing).

REPLACING THE VIDEO FILE

Once a customized video is created, its electronic file must be placed in the correct location for the program to locate and read it.

1. Store the new video file at **C:/Program Files/Ryko/AMTTCS/AVI.** **Note:** Multiple video files may be stored at this location. The file that will play is the one indicated in the Shockwave Video setting on the System Setups.

2. Once the file is in place, enter the Maintenance Menu and select System Setup.

3. Press the General Setup button. Then refer to the Shockwave Video tab.

4. In the Shockwave Video Filename pane, press the ABC… button to access the onscreen keyboard and type in the file name of the video file you wish to enable.

IMPORTANT: ALL VIDEO FILE NAMES MUST HAVE THE EXTENSION .swf. **INCLUDE THE EXTENSION WHEN TYPING IN THE NAME. FOR EXAMPLE, THE STANDARD DEFAULT VIDEO SENT WITH YOUR AMTT IS ENTERED AS** Default.swf**.**

5. Press the Accept button. The video will run when you exit the System Setups and Maintenance / Diagnostics Menus and normal operations are re-established.

PHOTOEYE CLEANING AND ADJUSTMENT

The photo-eye transmitter and receiver are mounted in the coin box pedestal. The transmitter sends out an infra-red beam which strikes an object (generally this will be a vehicle pulling up in front of the coin box) and then bounces back to the receiver. If the beam reaches the receiver, the object or vehicle is detected. Locate the photo-eye relay module. (Ryko PN 12703-037)

There are various adjustment knobs and lights. These are:

1. **DISTANCE knob**
2. **ToN (Time before activating)** knob adjustment (0-10 seconds)
3. **ToFF (Time stays on after activation**) knob adjustment (0-10 seconds)
4. **AUTO** light (GREEN LED)(Should always be OFF)
5. **CODE A/B** light (GRN/YEL LED)(Should always be YELLOW)
6. **ALARM/SIGNAL** light (RED/YEL LED)(Should come on YELLOW when something is in front of the coinbox.)
7. **OUTPUT** light (YELLOW LED) (Should come on YELLOW when something is in front of the coinbox. Signifies output relay is ON.)

Verify that the CODE A/B LED is lit and is YELLOW. If this LED is not lit, the photo-eye system will not operate and the following calibrations cannot be completed.

Located near the bottom of the unit is a plastic cover. Remove this cover by prying up the edge with a small screwdriver and verify that the 6 DIP switches inside are set as follows:

ALL SWITCHES TO THE RIGHT = OFF

Note: The factory settings of the unit as shown in the various assembly drawings are approximate and may require adjustment. If necessary, readjust according to Steps 1 through 3 below. Fine tune the 3 knobs until conditions described are met.

1. Have someone stand 4 feet in front of the coin box positioned directly in front of the photo-eyes.

2. Adjust the DIST control to illuminate the turn on the ALARM/ SIGNAL and the OUTPUT yellow LEDs.

3. Have the person move to the side at a right angle to the photo-eyes and insure that the yellow LED goes out. If the LED does *not* go out, turn the DIST control counter-clockwise about ½ of the distance between marks.

The desired result of this adjustment, is detection of a person walking in front of the coin box at a distance of approximately 4 feet and *not* detected as they pass (LEVEL LED comes on and then goes out). This action is designed to simulate a vehicle driving up to the coin box and then leaving. Since a person is more difficult to detect than a vehicle, utilizing a person for the above test insures a margin of safety when detecting vehicles.

Be very careful when adjusting the ToN and the ToFF knobs. The ToN knob adjusts the delay before the relay turns on after the vehicle is detected. The ToFF knob adjusts the delay after the vehicle leaves before the relay turns off. The ToN knob should be set to about 10% of it full range, while the ToFF knob should be set to about 75% of its full range. Adjust these knobs only if the delays are not correct for the application. The above settings, though, should be pretty accurate for most vehicle detection scenarios. If you have questions about the setting of these knobs or you have an unusual detection requirement, contact the Ryko Customer Services department for assistance.

WARRANTY INFORMATION

WARRANTY PARTS RETURN

All *RYKO* machines and accessories are built for longevity and reliability. Engineering designs are thoroughly tested and only the highest quality parts and components are used in the manufacture of *RYKO* equipment. Occasionally, however, a part, or component may prove defective. If a part on your Automated Modular Transaction Terminal with Color Screen (AMTT CS coin box) should fail under the conditions set forth in the *RYKO* Automated Modular Transaction Terminal Limited Warranty, it should be returned.

If your equipment was installed by a *RYKO* distributor, return the part freight prepaid to your authorized distributor. If you are located in the factory-direct sales and service area, return the part prepaid to *RYKO*. Be sure to contact the distributor or factory before returning any part to insure correct procedure is followed to receive a replacement part.

A *RYKO* Return Material Tag must be completely filled out and attached to each part returned. Several of these tags are included with the machine, and additional tags are available upon request.

MARS (MEI) 2000 SERIES BILL ACCEPTOR MAINTENANCE / DIAGNOSTICS INSTRUCTIONS

CONTENTS

THIS DOCUMENT INCLUDES MAINTENANCE, AND DIAGNOSTIC TESTING INSTRUCTIONS, FOR THE MARS (MEI) 2000 SERIES BILL ACCEPTORS.

GENERAL FEATURES 1
MARS # AE-2612-U3 (RYKO PART # 25036-000) 1
MARS # VN-2512-U3 (RYKO PART # 25036-001) 1
MARS # AE-2602-U3 (RYKO PART # 25036-003) 2
MARS # AE-2612-U5 (RYKO PART # 25036-005) 2
MARS # AE-2602-U2 (RYKO PART # 25036-006) 2
BILL ACCEPTANCE SWITCH SETTINGS 2
AMTT AND AMTT CREDIT POS 2
AMTT-CS 2
MULTI-UPGRADE 2
LCD MULTI-UPGRADE 3
SELF SERVE COINBOX WITH ROTARY SWITCH 3
SELF SERVE COINBOX WITH CODE ACTIVATION 3
CABLE ASSEMBLIES 3
AMTT AND AMTT CREDIT POS 3
AMTT-CS 3
MULTI-UPGRADE 3
LCD MULTI-UPGRADE 3
SELF-SERVE COINBOXES 3
MAINTENANCE AND CLEANING 4
DIAGNOSTIC CHECK LIST 6
COUPON CONFIGURATION 8

GENERAL FEATURES

Each of the following models are used in specific applications, they use either 24 VDC or 24 VAC power. Different cable assemblies provide the correct connections for power, and the configuration of the bill acceptor. In addition to the cable assembly, the configuration of the bill acceptor requires the bill acceptance switches to be set correctly, and/or serial communication from the host device.

MARS # AE-2612-U3 (RYKO PART # 25036-000)
This bill acceptor can accept $1.00, $5.00, and $10.00 bills in four directions, and has a compact bezel. It is primarily used in the AMTT-CS Coinbox and is configured for serial communications.

MARS # VN-2512-U3 (RYKO PART # 25036-001)
This bill acceptor can accept $1.00, and $5.00 bills in four directions, and has a compact bezel. It is primarily used in the Self-Serve Coinboxes, the Multi-Upgrade coinbox, and the LCD Multi-Upgrade coinbox. The Self-Serve coinbox are configured for (discrete) interface, and the Multi-Upgrade coinbox is configured for serial communications.

MARS # AE-2602-U3 (RYKO PART # 25036-003)
This bill acceptor can accept $1.00, $5.00, and $10.00 bills in four directions, and has a standard bezel. It is primarily used in the AMTT Coinbox and is configured for its own (discrete) interface.

MARS # AE-2612-U5 (RYKO PART # 25036-005)
This bill acceptor can accept Canadian $5.00, and $10.00 bills in four directions, and has a compact bezel. It is primarily used in the Self-Serve Coinbox and is configured for its own (discrete) interface.

MARS # AE-2602-U2 (RYKO PART # 25036-006)
This bill acceptor can accept $1.00, $5.00, and $10.00 bills in four directions, and has a standard bezel. It is primarily used in the AMTT Credit POS Coinbox and is configured for its own (discrete) interface.

BILL ACCEPTANCE SWITCH SETTINGS

Bill acceptance switches are located on the left side of the bill acceptor looking from the back.

AMTT and AMTT Credit POS
A coupon must be used to set-up the bill acceptor along with all the bill acceptance switch settings in the OFF position as shown in figure 1. SEE coupon configuration.

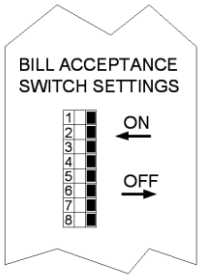

Figure 1

AMTT-CS
The bill acceptor is set up via serial communication, along with all the bill acceptance switch settings in the positions shown in figure 2. Refer to AMTT CS Service Manual for Set-up and Diagnostics.

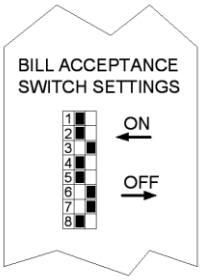

Figure 2

MULTI-UPGRADE
The bill acceptor is set up via serial communication, along with the bill acceptance switch settings shown in figure 3.

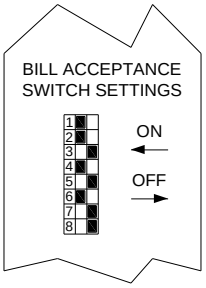

Figure 3

LCD MULTI-UPGRADE
The bill acceptor is set up via serial communication, along with the bill acceptance switch settings shown in figure 4.

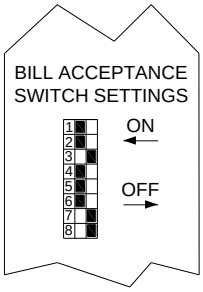

Figure 4

SELF SERVE COINBOX WITH ROTARY SWITCH
A coupon must be used to set-up the bill acceptor along with all the bill acceptance switch settings in the OFF position as shown in figure 5. SEE coupon configuration.

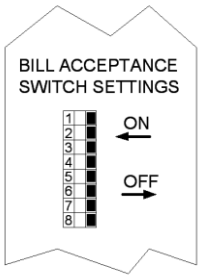

Figure 5

SELF SERVE COINBOX WITH CODE ACTIVATION
A coupon must be used to set-up the bill acceptor along with all the bill acceptance switch settings in the OFF position as shown in figure 6. SEE coupon configuration.

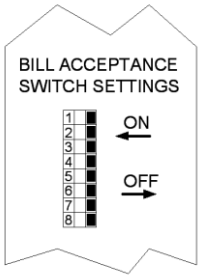

Figure 6

CABLE ASSEMBLIES

AMTT and AMTT Credit POS
25566-001 CABLE ASSY/AMTT,MEI,$1,5,10

AMTT-CS
25602-001 MDB CABLE HARNESS/AMTT CS

MULTI-UPGRADE
25602-002 MDB CABLE HARNESS/MUCB

LCD MULTI-UPGRADE
25602-000 MDB CABLE HARNESS/MUCB

SELF-SERVE COINBOXES
25548-000 CABLE ASSY/ BILL ACCEPTOR,SSS, UNITED STATES
25548-001 CABLE ASSY/ BILL ACC,SSS, CANADA

MAINTENANCE AND CLEANING

The bill acceptor will require cleaning a minimum of once per month. Cleaning properly can save on down time and costs and increase the bill acceptor life.

Disconnect power before disconnecting and removing any components for cleaning.

To clean the bill acceptor components, use a soft moistened cloth with mild non-abrasive detergent.

RECOMMENDED CLEANING AGENTS
RYKO Detergent, Top Job with Ammonia, Johnson's Pledge, Fantastic, Mr. Clean, Janitor in a Drum, Handy Andy, Spic $ Span, Joy, and Swish.

To remove the magazine follow these steps.
SEE Figure 7.

1. Remove the locking hasps (if installed) by rotating and pushing the hasps forward away from the magazine.

2. Remove the magazine by pushing the blue latch on top of the bill acceptor forward and lift the magazine up and back.

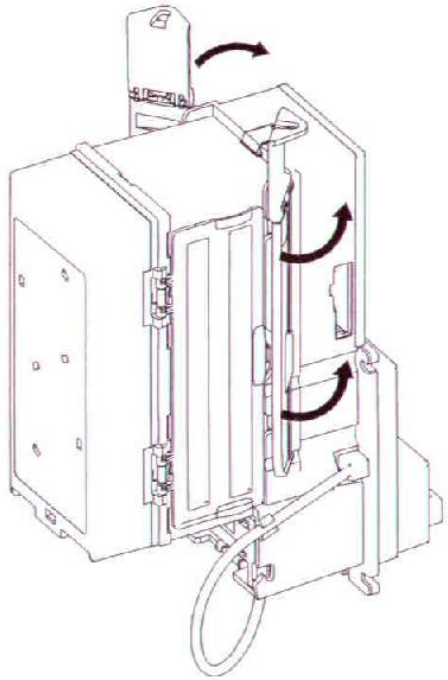

Figure 7

Remove the cross channel and gain access to the bill path and photocells by lifting up on the silver metal bar and pulling back.

If the connecting cable has a wire tie that keeps the cable from being pinched in a coinbox door, remove the wire tie before removing the cross channel.

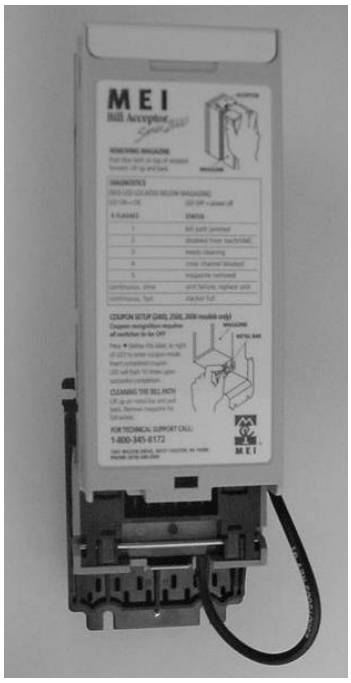

Figure 8

After the magazine is removed, clean the bill stacker and belts on the bill acceptor, and clean the bill path on the magazine.

To clean other side of the belts restore power long enough to allow the acceptor to start and go through its initialization. This will drive the belts exposing the other side of the belts for cleaning.

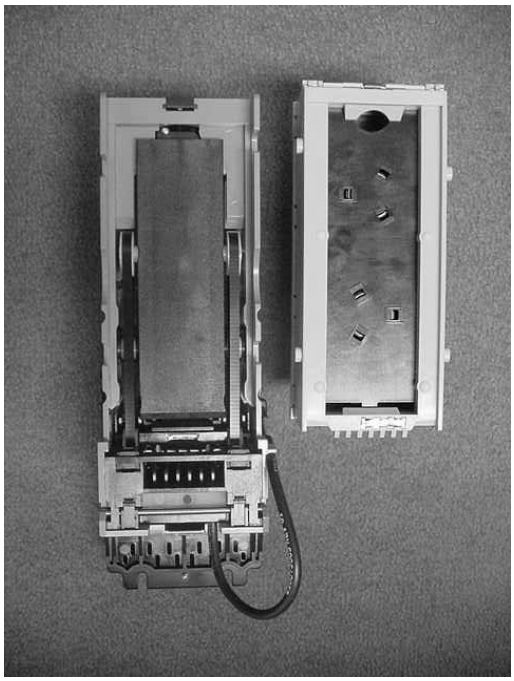

Figure 9

Clean the surface of the cross channels bill path and the glass enclosing the photocell.

Clean the surface of the bill acceptors bill path and the glass enclosing the photocell located in the opening left by the removed cross channel.

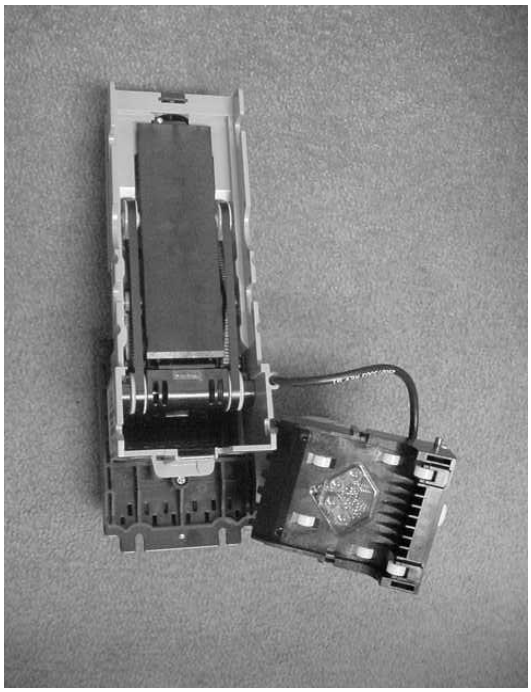

Figure 10

After the bill acceptor and its components have been cleaned using a mild non-abrasive detergent and soft moistened cloth allow it to dry for a few minutes. Replace all the components in the reverse order that they were disassembled. If the cable to the cross channel had a wire tie, tie the cable back up so that it does not get pinched in the coinbox door.

DIAGNOSTIC CHECK LIST

Refer to the label located on the back of the bill acceptor's magazine for a quick reference to the diagnostic flashing LED. The Red LED is located below the magazine.

LED ON = power ON

Problem	Symptom	Probable cause
Unit dead	LED OFF = power OFF The bill acceptor does not power up and a bill does not get pulled in.	1. Cable assembly damaged, connections loose, not properly connected, or bent connector pins. 2. Loss of source voltage. Check source voltage to ensure that power is being supplied to the bill acceptor.
Unit takes a bill, but won't credit	A bill is pulled into the bill acceptor and the host device does not credit the bill value.	1. Bill acceptor is not set-up correctly. Check bill acceptance switch settings for your application. If a coupon is required for set-up ensure the correct coupon was used. SEE Bill Acceptance Switch Settings. 2. Cable assembly damaged, connections loose, not properly connected, or bent connector pins.

Problem	Symptom	Probable cause
Bill does not get pulled into the bill acceptor.	LED FLASHES 1 TIME Bill path jammed	1. A bill or a foreign object has obstructed the bill path. Remove the magazine and clear the obstruction.
	LED FLASHES 2 TIMES The bill acceptor is disabled.	1. The host device may disable the bill acceptor during normal operation (for example, the wash is closed, or enough money has been entered to purchase the wash). 2. Cable assembly damaged, connections loose, not properly connected, or bent connector pins.
Bill is pulled into the bill acceptor and rejected.	LED FLASHES 3 TIMES Bill acceptor needs cleaning.	1. The host device may reject a bill during normal operation when change cannot be given. 2. Excessive dirt and grime may have built up over the photocells, belts, and stacking mechanism. SEE Maintenance and Cleaning.
	LED FLASHES 4 TIMES Cross channel blocked.	1. Excessive dirt and grime may have built up over the photocells. SEE Maintenance and Cleaning.
	LED FLASHES 5 TIMES Magazine Removed.	1. The magazine has been removed. Replace the magazine.
	LED FLASHES CONTINUOUS, SLOW Bill acceptor failure.	1. The bill acceptor has failed. Replace the bill acceptor.
	LED FLASHES CONTINUOUS, FAST Bill stacker full.	1. The bill acceptor magazine is full of bills. Remove bills from the magazine.

COUPON CONFIGURATION

1. Use the correct coupon to configure the bill acceptor for the one of the following coinbox systems

   Coupon for a self-serve coinbox with code activation.

25557-001	CONFIG COUPON/BA,SSS,KEYPAD	for United States Currency
25557-005	CONFIG COUPON/BA,SSS,KYPD,CAN	for Canada Currency

   Coupon for a self-serve coinbox with rotary switch.

25557-000	CONFIG COUPON/BA,SSS,ROTARY SW	for United States Currency
25557-004	CONFIG COUPON/BA,SSS,RTRY,CAN	for Canada Currency

   Coupon for an AMTT that accepts $1, and $5 United States Currency.

   25557-002 CONFIG COUPON/BA,AMTT,$1&5

   Coupon for an AMTT that accepts $1, $5 and $10 United States Currency.

   25557-003 CONFIG COUPON/BA,AMTT,$1,5,&10

2. Verify that all bill acceptance switches are OFF.

3. Make copies on a standard, carbon based, non-color copier, AND cut to match the size of the original coupons.

4. All sections are filled in to configure the bill acceptors.

5. Locate the service button on the back of the bill acceptor (blue dot to right of the red LED). Depress the button once to enter coupon set-up mode. Depressing again will exit the mode.

6. Insert coupon and verify settings were accepted.

   ACCEPTED: Coupon returned immediately and LED flashed 10 times when coupon pulled out.

   REJECTED: Coupon returned after ten seconds. LED flashes number of times corresponding to section improperly filled out. Example: Six flashes for improper section six.
   If error is indicated, locate coupon from installation guide supplied with the bill acceptor and fill out sections as shown in the following coupons. Review instructions and try new coupon.

INSTRUCTIONS/COIN MECHANISM (SECURE COIN OPTION)

The Secure Coin coin acceptor accepts quarters, dollar coins, or tokens. The Secure Coin acceptor keypad controls the pre-programmed coin selection, the selection of new coins or tokens to be learned, the number of pulses each new coin generates, and the width and sensitivity of the pulse produced as coins or tokens are deposited.

PROGRAMMING REQUIREMENTS

US $1 and $.25 coins are already recognized (learned) and activated for use with the coin acceptor. All other coins or tokens must be activated and require programming on the coin acceptor keypad as described below. Refer to the illustration at right.

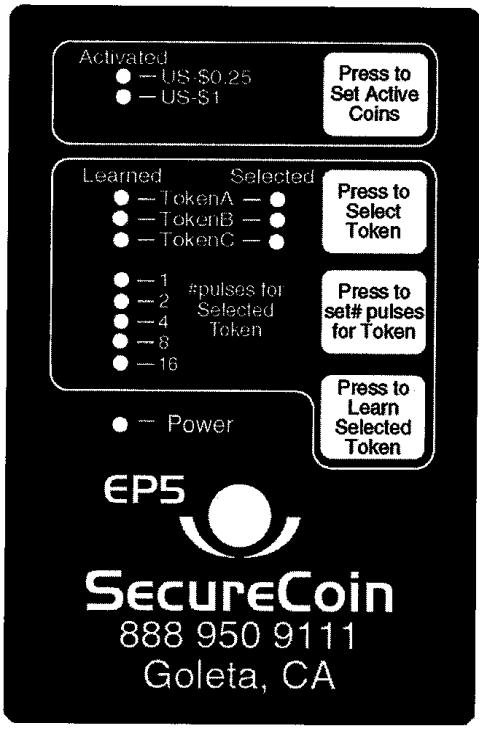

EP5*Plus* KEYPAD

SETTING ACTIVE COINS

With the coin acceptor connected to 24 VAC and powered up, press the PRESS TO SET ACTIVE COINS key. This allows the selection of either, both or neither preprogrammed coins. An LED adjacent to the two preprogrammed coin values illuminates to show which coins are activated.

LEARNING COINS OR TOKENS (SECURE COIN OPTION)

Follow the four step process below to learn new coins or tokens. This process requires the use of two of the desired coins or tokens you wish to program.

IMPORTANT: THE TIMING OF ACTIONS REQUIRED IN THIS PROCESS IS IMPORTANT. READ THROUGH THE REQUIRED STEPS BEFORE BEGINNING SO THAT YOU WILL BE PREPARED TO COMPLETE THE PROCESS CORRECTLY.

Step One: To select the token location to program (Token A, B, or C), press the PRESS TO SELECT TOKEN key until the LED under the SELECTED column lights beside the desired token location selection.

Step Two: Press the PRESS TO LEARN THE SELECTED TOKEN key to set the acceptor to 'learn' mode.

Step Three: Within 10 seconds of pressing the PRESS to LEARN key, drop the coin or token to be learned through the coin acceptor two times in succession. **Note:** The coin acceptor must be level and plumb to allow the coin or token to fall naturally.

Step Four: Within 10 seconds of dropping the coins through the coin acceptor, select the number of pulses desired for the new coin or token value. Press the PRESS TO SET # PULSES FOR TOKEN key one time for each pulse desired (for example: press the key 15 times for 15 pulses). The value you selected is displayed as illuminated LED's next to # Pulses For Selected Token. **Note:** The values are cumulative. That is, if the 1 and 2

LED's are on, 3 pulses is the chosen value. In this way, any number of pulses from 1 through 15 may be programmed.

SETTING PULSE WIDTH AND DISCRIMINATION SENSITIVITY

Setting pulse width and discrimination sensitivity (tolerance) is also accomplished using the coin acceptor keypad.

IMPORTANT: *FOR THE FIRST 10 SECONDS AFTER THE COIN ACCEPTOR IS POWERED UP*, **THE LED'S ADJACENT TO "# PULSES FOR SELECTED TOKEN" INDICATE THE CURRENT SETTINGS FOR PULSE WIDTH AND TOLERANCE LEVEL.** *AFTER THE INITIAL 10 SECONDS*, **THE DISPLAY LED'S REVERT TO INDICATING THE NUMBER OF PULSES PROGRAMMED FOR THE SELECTED TOKEN/COIN.**

To determine the current Pulse Width and Discrimination Sensitivity levels, remove power from the coin acceptor. Then restore power and note which of the LEDs adjacent to # Pulses Selected for Token come on. The LEDs indicate the pulse width and discrimination sensitivity as described below and in the illustration at right.

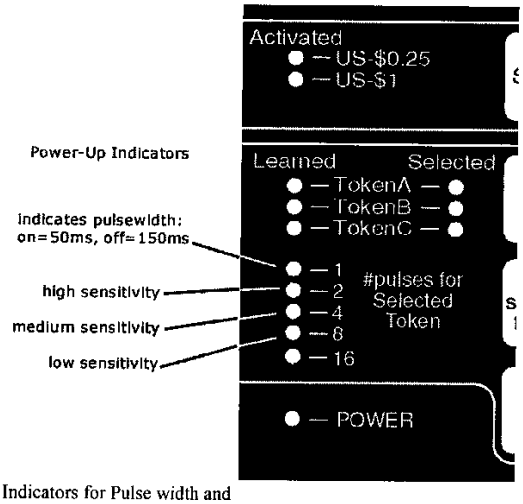

Indicators for Pulse width and Discrimination Sensitivity

LED #	LED CONDITION	INDICATES
1	ON	50ms pulse width (coin acceptor is set for 65ms)
1	OFF	150 ms pulse width (coin acceptor is set for 140 ms)
2	ON	high discrimination sensitivity
4	ON	medium discrimination sensitivity
8	ON	low discrimination sensitivity

SETTING THE PULSE WIDTH

Turn on power to the coin acceptor and quickly read the pulse width indicator. If illuminated, the coin acceptor is set for 65ms. If off, the acceptor is set for 140ms. To change the setting, remove power from the coin acceptor. Then hold the PRESS TO SET ACTIVE COINS key down while power is restored until the POWER LED lights. This toggles the setting between short (50ms) and long (150ms) pulse width outputs. **Note:** 50ms is the standard pulse width setting.

SETTING THE DISCRIMINATION SENSITIVITY

To set Discrimination Sensitivity, it is necessary to remove power from the coin acceptor and then restore power while pressing one of three keys.

To set high sensitivity, press the PRESS TO SELECT TOKEN key during power up.

To set medium sensitivity, press the PRESS TO SET # PULSES FOR TOKEN key during power up.

To set low sensitivity, press the PRESS TO LEARN SELECTED TOKEN during power up.

Note: Power up settings will not affect token and value settings held in non-volatile memory within the coin acceptor. These may be changed at any time without disturbing other settings. This coin acceptor keypad/indicator does not require external or battery power to maintain memory settings and may be powered down for extended periods of time without adverse affect.

COIN ACCEPTOR TROUBLESHOOTING (SECURE COIN OPTION)

PROBLEM	**PROBABLE CAUSE / SOLUTION**
Rejects Coins	Coins inserted are not activated and programmed for use with the coin acceptor. Refer to Coin Acceptor Programming (Secure Coin Option).
	Discrimination sensitivity may need adjustment. Refer to Setting Pulse Width And Discrimination Sensitivity.
	Coin mechanism jammed with coin or debris. Clear mechanism.
Accepts coin but doesn't credit	Wiring. Check wiring between the coin switch and the counter timer.
Accepts coins but does not activate wash function.*	Selector device set to STOP position. Turn Rotary Selector Switch or press a wash function selection key on the paypad to indicate a wash

*Signature Series coin box only.

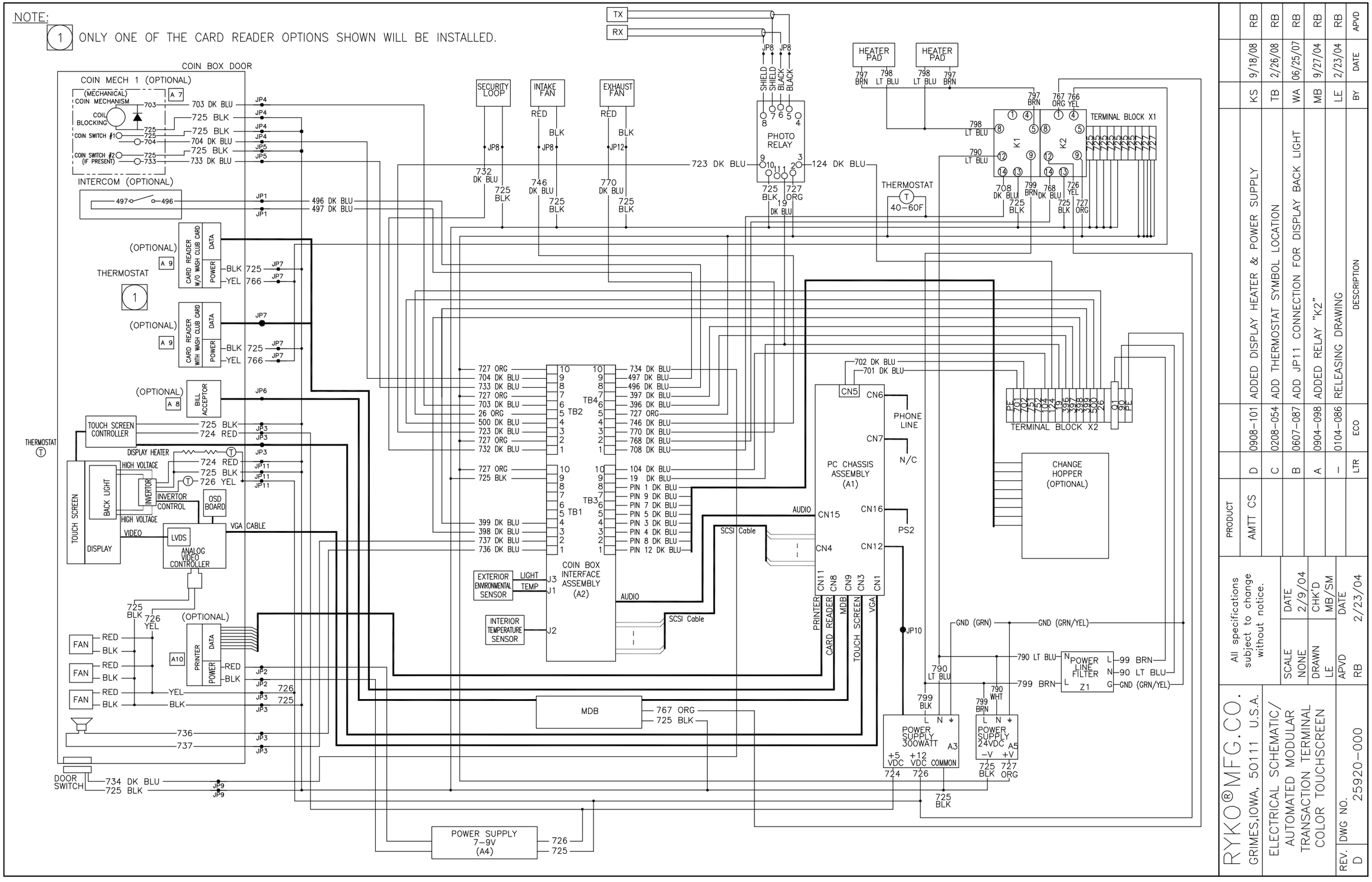

LTR	DESCRIPTION	DATE	BY	APVD
D	ADDED DISPLAY HEATER & POWER SUPPLY	9/18/08	KS	RB
C	ADD THERMOSTAT SYMBOL LOCATION	2/26/08	TB	RB
B	ADD JP11 CONNECTION FOR DISPLAY BACK LIGHT	06/25/07	WA	RB
A	ADDED RELAY "K2"	9/27/04	MB	RB
–	RELEASING DRAWING	2/23/04	LE	RB
ECO				

PRODUCT: AMTT CS

All specifications subject to change without notice.

SCALE	DATE
NONE	2/9/04
DRAWN	CHK'D
LE	MB/SM
APVD	DATE
RB	2/23/04

RYKO® MFG. CO.
GRIMES, IOWA, 50111 U.S.A.

ELECTRICAL SCHEMATIC/
AUTOMATED MODULAR
TRANSACTION TERMINAL
COLOR TOUCHSCREEN

REV. D
DWG NO. 25920-000

FORM #19477-039 REV B 1/21/97

ICVERIFY INSTALLATION AND SETUP

CONTENTS

THIS DOCUMENT INCLUDES INSTALLATION AND SETUP INSTRUCTIONS FOR ICVERIFY VERSIONS 3.1.4, 3.1.5, 3.1.6, 4.0.0, 4.0.2, & 4.0.3

TERMINOLOGY 1
INSTALLATION REQUIREMENTS 2
PRE-INSTALLATION 3
ICVERIFY 3.1.4 INSTALLATION 8
ICVERIFY 3.1.5 INSTALLATION 11
ICVERIFY 3.1.6 INSTALLATION 14
ICVERIFY 4.0.0 INSTALLATION 17
ICVERIFY 4.0.2 INSTALLATION 22
ICVERIFY 4.0.3 INSTALLATION 27
ICVERIFY 4.0.3 SP INSTALLATION 32

A keyboard, mouse, and access to the devices to have ICVerify installed are required for the completion of this setup guide.

TERMINOLOGY

Left-Click	A press and release of the left mouse button.
Right-Click	A press and release of the right mouse button.
Double-Click	Two left-clicks in quick succession of each other.
Select	A left-click.
Device	Within the scope of this document ‘device’ refers to a PC based machine that will have software installed/configured upon it.

INSTALLATION REQUIREMENTS

- Determine where ICVerify needs to be installed. A different copy of ICVerify must be installed at every site that credit card processing is required. A webserver used for Web Marketing NOT located at a wash site is considered a site of its own.

- Determine which device needs ICVerify installed at each site. If a Touch&Go is available then install there. If not, but a CAWIV-iC or Bay Pay PC hardware is available then install there. If neither of the previous options are available and an AMTT-CS is available then install there. **ICVerify is not to be installed on a Web Marketing PC that is hosting a web site under any circumstances. It also is not to be installed on any PC that has internet access without a properly configured hardware firewall that blocks unnecessary inbound access to the PC. Failure to follow these guidelines is a violation of Payment Card Industry (PCI) standards for credit card processing and may subject the operator to fines or other penalties in the event of credit card data theft.**

- A mouse and keyboard. These are needed to access some devices. If not already connected then connect these to the device and reboot.

- The processor setup information form that was returned from the authorization service.

- Site information (name, address, telephone number). **Important:** Make sure that the Site Information setups on the device and/or and site information entered during the ICVerify setup procedure match the information shown on the processor setup form from the authorization exactly.

- ICVERIFY serial number (from product box).

- Identify the communications port to which the modem is attached. To locate this information, click on START **>** SETTINGS **>** CONTROL PANEL **>** PHONE AND MODEM OPTIONS, and then select the Modems tab. The 'Attached To' column will show which COM port is being used. Make a note of this for use later in this procedure.

PRE-INSTALLATION

1. Gain access to the desktop of the device (the exact procedure varies per device, please see its accompanying documentation).

2. Close the ICVERIFY Multi-User Request File Processor program, if it is open, by right-clicking on the ICVERIFY task bar entry (see **Figure 1** below) at the bottom of the desktop and selecting CLOSE.

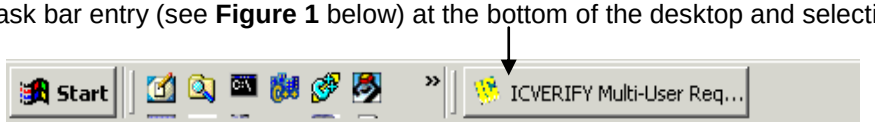

Figure 1: ICVerify Multi-User Request

3. Determine which version of ICVerify to install by finding the name of the processor on the merchant account information and comparing it to the chart below starting with the highest version number and working down:

ICVerify	Credit Card Processors
3.1.4	American Express
	Discover Card Services
	FDMS Cardnet-CES *(First Data Merchant Services)*
	FDMS Envoy *(First Data Merchant Services)*
	FDMS FDR type 7 *(First Data Merchant Services)*
	FDMS Nabanco New *(First Data Merchant Services)*
	First Horizon
	GE/RSF *(Retail Sales Finance)*
	GPS Atlanta-NDC *(Global Payment Services)*
	GPS St. Louis-MAPP Host *(Global Payment Services)*
	Lynk
	Paymentech UTF
	Vital *(a.k.a. VisaNet)*
	Wells

ICVerify	Credit Card Processors
3.1.5	American Express
	Discover Card Services
	FDMS Cardnet-CES *(First Data Merchant Services)*
	FDMS Envoy *(First Data Merchant Services)*
	FDMS FDR type 7 *(First Data Merchant Services)*
	FDMS Nabanco New *(First Data Merchant Services)*
	First Horizon
	GE/RSF *(Retail Sales Finance)*
	GPS Atlanta-NDC *(Global Payment Services)*
	GPS St. Louis-MAPP Host *(Global Payment Services)*
	Heartland Payment Systems
	Lynk
	Paymentech UTF
	Vital *(a.k.a. VisaNet)*
	Wells
3.1.6	American Express
	Buypass
	Discover Card Services
	FDMS Cardnet-CES *(First Data Merchant Services)*
	FDMS Nashville (Envoy) *(First Data Merchant Services)*
	FDMS FDR type 7 *(First Data Merchant Services)*
	FDMS Nabanco New *(First Data Merchant Services)*
	First Horizon
	GE/RSF *(Retail Sales Finance)*
	GPS Atlanta-NDC *(Global Payment Services)*
	GPS St. Louis-MAPP Host *(Global Payment Services)*
	Heartland Payment Systems
	Nova
	Paymentech UTF
	RBS Lynk
	Vital *(a.k.a. VisaNet)*
	Wells

ICVerify	Credit Card Processors
4.0.0	American Express
	Buypass
	Discover Card Services
	FDMS South *(PROSA)*
	FDMS Cardnet-CES *(First Data Merchant Services)*
	FDMS Nashville (Envoy) *(First Data Merchant Services)*
	FDMS FDR type 7 *(First Data Merchant Services)*
	FDMS Nabanco New *(First Data Merchant Services)*
	First Horizon
	GE/RSF *(Retail Sales Finance)*
	GPS Atlanta-NDC *(Global Payment Services)*
	GPS St. Louis-MAPP Host *(Global Payment Services)*
	Heartland Payment Systems
	Nova
	Paymentech UTF
	RBS Lynk
	Vital *(a.k.a. VisaNet)*
	Wells
4.0.2	American Express
	Buypass
	Discover Card Services
	FDMS South *(PROSA)*
	FDMS Cardnet-CES *(First Data Merchant Services)*
	FDMS Nashville (Envoy) *(First Data Merchant Services)*
	FDMS FDR type 7 *(First Data Merchant Services)*
	FDMS Nabanco New *(First Data Merchant Services)*
	First Horizon
	GE/RSF *(Retail Sales Finance)*
	GPS Atlanta-NDC *(Global Payment Services)*
	GPS St. Louis-MAPP Host *(Global Payment Services)*
	Heartland Payment Systems
	Nova
	Paymentech UTF
	RBS Lynk
	Vital *(a.k.a. VisaNet)*
	Wells

ICVerify	Credit Card Processors
4.0.3	American Express
	Chase Paymentech - Tampa
	FDMS Atlanta (Concord Buypass)
	FDMS – CARDNet (North)
	FDMS – Nashville (Envoy)
	FDMS – South (Nabanco)
	FDR - Omaha
	First Horizon Merchant Services
	GE Retail Sales Finance *(RSF / Monogram)*
	Global Payments – Central (MAPP)
	Global Payments – East (NDC)
	Heartland Payment Systems
	Nova - Encompass
	RBS Lynk Systems
	TSYS Acquiring Solutions

4. Follow the instructions under the section of this document that corresponds to the version of ICVerify needed.

ICVERIFY 3.1.4 INSTALLATION

1. Open a Windows Explorer window and navigate to the C:\Installs directory. If this directory does not exist proceed to step #3 below.

2. Find the “ICVERIFY_3_1_4” directory and open it.

3. If the “ICVERIFY_3_1_4” directory does not exist:

   - Insert the “ICVerify 3.1.4” CD into the CD-ROM of the device, wait for the “ICVerify Installer” window to appear, and proceed to step #5 below.

   - Remove the CD and return it to its case upon the completion of this document.

4. Run the “ICVerifyInstall.exe” file.

5. Left-click the “Install Software” option of the “ICVerify Installer” window.

6. Left-click “Next”.

7. Left-click “Yes”.

8. Left-click the “Browse” button on the “Choose Destination Location” window.

9. Change “C:\ICWin314” to “C:\ICWin310”.

   NOTE: This must be done for Credit Charge Server to properly communicate with this version of ICVerify.

10. Left-click “OK”.

11. Left-click “Yes”.

12. Left-click “Next”.

13. Left-click “Next”.

14. Left-click “No” on the “Question” window.

15. Left-click “Next”.

16. Left-click “Next”.

17. Left-click “No” on the “Configuration Diskette” window.

18. Select “Yes” on the “Question” window.

19. If the “ICVERIFY Setup Wizard” is not displayed:

    - Select “Setup Wizard” from the file menu of the “ICVerify Setup” window.
    - If the “ICVerify Setup” window is not available either then open it manually. From the taskbar select “Start” **>** “Programs” **>** “ICVERIFY for Windows” **>** “ICVERIFY Setup”

20. Proceed through the following screens entering the merchant account and site information where indicated. If you need help with the setups you may call ICVerify’s Support at 1-800-666-5777.

    - When entering authorization and settlement phone numbers DO NOT use spaces or hyphens. Example: 18888675309
    - Type of business should always be selected/entered as “Retail”

21. Stop once you reach the “Modem Setup” screen (see **Figure 3.1.4-1** below).

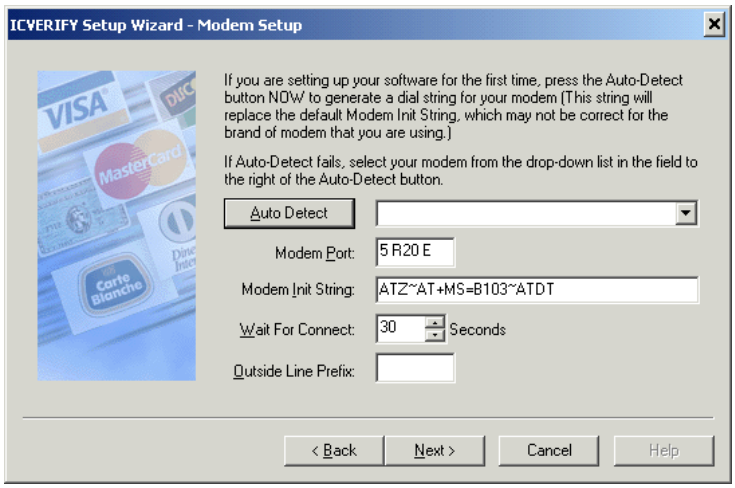

Figure 3.1.4-1: Modem Setup

22. Enter the “Modem Port” and “Modem Init String” as detailed below (DO NOT use “Auto Detect”):

5	**R20**	**E**
Communications port For Attached Modem. If the modem port gathered in the “Installation Requirements” section of this document is not 5 then use that number instead.	The number of times the system will retry to establish connection with the authorization service.	**E** stands for even parity.

Note: Enter a space between each option in the “Modem Port” field
Example: **5 R20 E**

The Modem Init String: **ATZ~AT+MS=B103~ATDT**

23. Left-click “Next” to proceed to the “Validation Code” window (see **Figure 3.1.4-2** below).

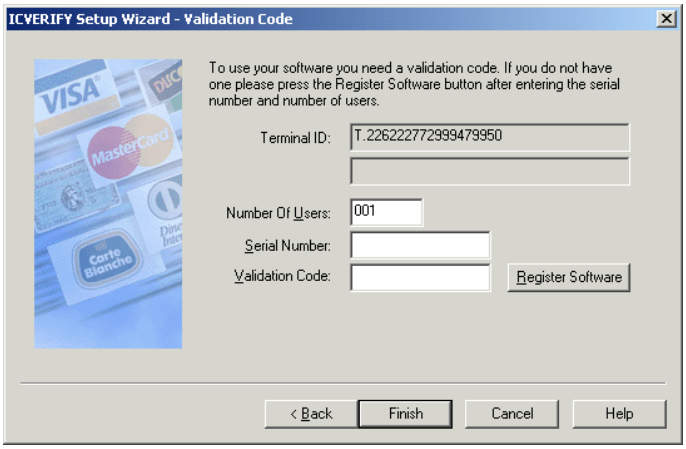

Figure 3.1.4-2: Serial Number & Validation Code

24. Refer to the ICVerify product box to locate the serial number for entry in the Serial Number field on the screen below.

25. Call ICVerify’s support line to receive a validation code at 1-877-271-2653.

26. Left-click “Finish” on the proceeding windows to complete the installation.

27. Close all remaining open windows.

28. If prompted to save changes select “Yes”.

ICVERIFY 3.1.5 INSTALLATION

1. Open a Windows Explorer window and navigate to the C:\Installs directory. If this directory does not exist proceed to step #3 below.

2. Find the “ICVERIFY_3_1_5” directory and open it.

3. If the “ICVERIFY_3_1_5” directory does not exist:

- Insert the “ICVerify 3.1.5” CD into the CD-ROM of the device, wait for the “ICVerify Installer” window to appear, and proceed to step #5 below.

- Remove the CD and return it to its case upon the completion of this document.

4. Run the “ICVerifyInstall.exe” file.

5. Left-click the “Install Software” option of the “ICVerify Installer” window.

6. Left-click “Next”.

7. Left-click “Yes”.

8. Left-click the “Browse” button on the “Choose Destination Location” window.

9. Change “C:\ICWin315” to “C:\ICWin310”.

   NOTE: This must be done for Credit Charge Server to properly communicate with this version of ICVerify.

10. Left-click “OK”.

11. Left-click “Yes”.

12. Left-click “Next”.

13. Left-click “Next”.

14. Left-click “No” on the “Question” window.

15. Left-click “Next”.

16. Left-click “Next”.

17. Left-click “No” on the “Configuration Diskette” window.

18. Select “Yes” on the “Question” window.

19. If the “ICVERIFY Setup Wizard” is not displayed:

- Select “Setup Wizard” from the file menu of the “ICVerify Setup” window.
- If the “ICVerify Setup” window is not available either then open it manually. From the taskbar select “Start” **>** “Programs” **>** “ICVERIFY for Windows” **>** “ICVERIFY Setup”

20. Proceed through the following screens entering the merchant account and site information where indicated. If you need help with the setups you may call ICVerify’s Support at 1-800-666-5777.

- When entering authorization and settlement phone numbers DO NOT use spaces or hyphens. Example: 18888675309
- Type of business should always be selected/entered as “Retail”

21. If configuring ICVerify for high speed internet processing then skip to step #25 below.

22. Stop once you reach the “Modem Setup” screen (see **Figure 3.1.5-1** below).

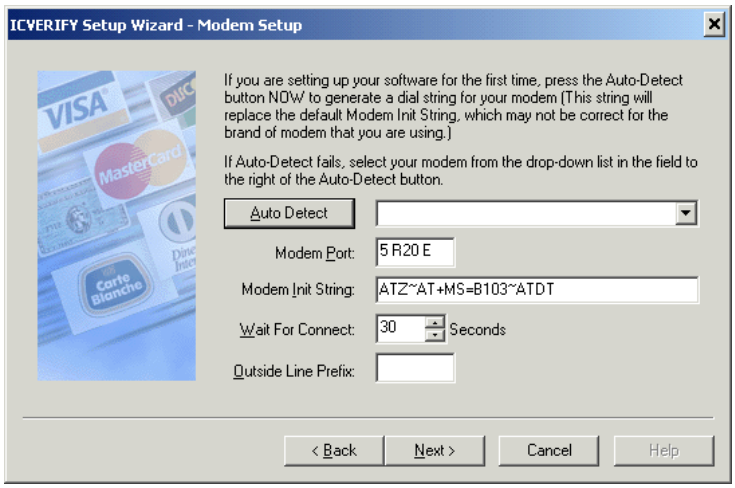

Figure 3.1.5-1: Modem Setup

23. Enter the “Modem Port” and “Modem Init String” as detailed below (DO NOT use “Auto Detect”):

5	**R20**	**E**
Communications port For Attached Modem. If the modem port gathered in the “Installation Requirements” section of this document is not 5 then use that number instead.	The number of times the system will retry to establish connection with the authorization service.	**E** stands for even parity.

Note: Enter a space between each option in the “Modem Port” field
Example: **5 R20 E**

The Modem Init String: **ATZ~AT+MS=B103~ATDT**

24. Left-click “Next” to proceed to the “Validation Code” window (see **Figure 3.1.5-2** below).

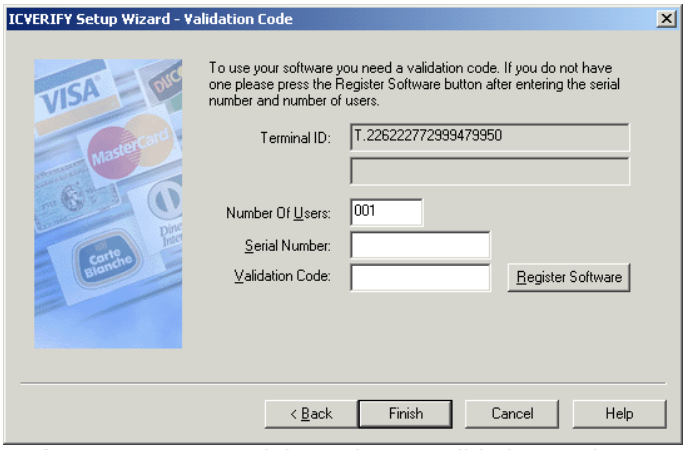

Figure 3.1.5-2: Serial Number & Validation Code

25. Refer to the ICVerify product box to locate the serial number for entry in the Serial Number field on the screen below.

26. Call ICVerify’s support line to receive a validation code at 1-877-271-2653.

27. Left-click “Finish” on the proceeding windows to complete the installation.

28. Close all remaining open windows.

29. If prompted to save changes select “Yes”.

ICVERIFY 3.1.6 INSTALLATION

1. Open a Windows Explorer window and navigate to the C:\Installs directory. If this directory does not exist proceed to step #3 below.

2. Find the “ICVERIFY_3_1_6” directory and open it.

3. If the “ICVERIFY_3_1_6” directory does not exist:

- Insert the “ICVerify 3.1.6” CD into the CD-ROM of the device, wait for the “ICVerify Installer” window to appear, and proceed to step #5 below.

- Remove the CD and return it to its case upon the completion of this document.

4. Run the “ICVerifyInstall.exe” file.

5. Left-click the “Install Software” option of the “ICVerify Installer” window.

6. Left-click “Next”.

7. Left-click “Yes”.

8. Left-click the “Browse” button on the “Choose Destination Location” window.

9. Change “C:\ICWin316” to “C:\ICWin310”.

   NOTE: This must be done for Credit Charge Server to properly communicate with this version of ICVerify.

10. Left-click “OK”.

11. Left-click “Yes”.

12. Left-click “Next”.

13. Left-click “Next”.

14. Left-click “No” on the “Question” window.

15. Left-click “Next”.

16. Left-click “Next”.

17. Left-click “No” on the “Configuration Diskette” window.

18. Select “Yes” on the “Question” window.

19. If the “ICVERIFY Setup Wizard” is not displayed:

- Select “Setup Wizard” from the file menu of the “ICVerify Setup” window.
- If the “ICVerify Setup” window is not available either then open it manually. From the taskbar select “Start” **>** “Programs” **>** “ICVERIFY for Windows” **>** “ICVERIFY Setup”

20. Proceed through the following screens entering the merchant account and site information where indicated. If you need help with the setups you may call ICVerify’s Support at 1-800-666-5777.

- When entering authorization and settlement phone numbers DO NOT use spaces or hyphens. Example: 18888675309
- Type of business should always be selected/entered as “Retail”

21. If configuring ICVerify for high speed internet processing then skip to step #25 below.

22. Stop once you reach the “Modem Setup” screen (see **Figure 3.1.6-1** below).

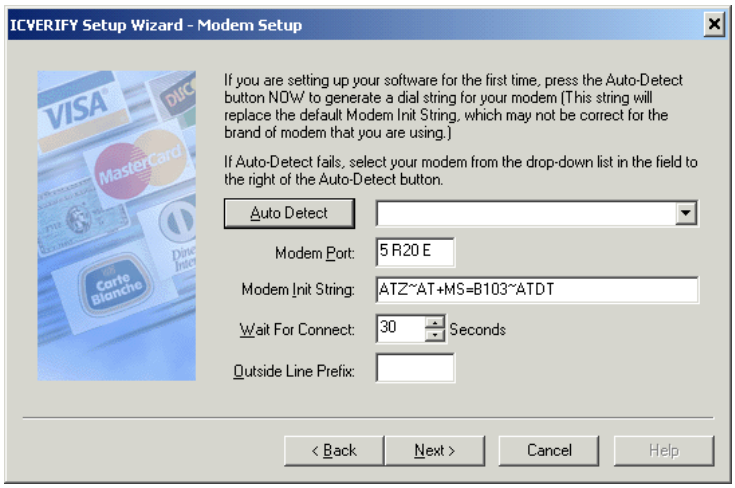

Figure 3.1.6-1: Modem Setup

23. Enter the “Modem Port” and “Modem Init String” as detailed below (DO NOT use “Auto Detect”):

5	**R20**	**E**
Communications port For Attached Modem. If the modem port gathered in the “Installation Requirements” section of this document is not 5 then use that number instead.	The number of times the system will retry to establish connection with the authorization service.	**E** stands for even parity.

Note: Enter a space between each option in the “Modem Port” field
Example: **5 R20 E**

The Modem Init String: **ATZ~AT+MS=B103~ATDT**

24. Left-click “Next” to proceed to the “Validation Code” window (see **Figure 3.1.6-2** below).

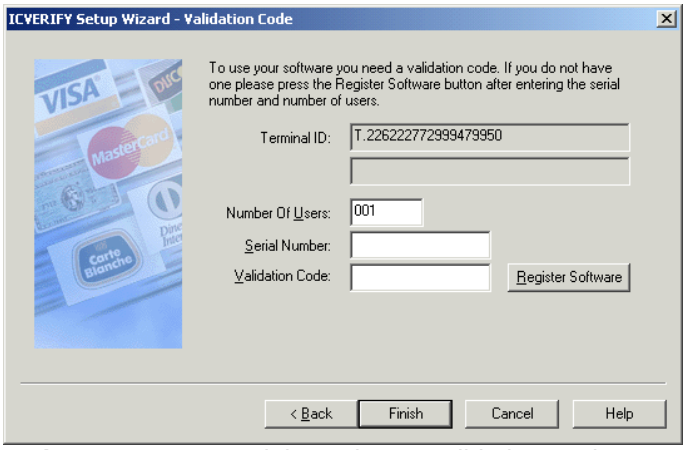

Figure 3.1.6-2: Serial Number & Validation Code

25. Refer to the ICVerify product box to locate the serial number for entry in the Serial Number field on the screen below.

26. Call ICVerify’s support line to receive a validation code at 1-877-271-2653.

27. Left-click “Finish” on the proceeding windows to complete the installation.

28. Close all remaining open windows.

29. If prompted to save changes select “Yes”.

ICVERIFY 4.0.0 INSTALLATION

1. Open a Windows Explorer window and navigate to the C:\Installs directory. If this directory does not exist proceed to step #3 below.

2. Find the “ICVERIFY_4_0_0” directory and open it.

3. If the “ICVERIFY_4_0_0” directory does not exist:

    a. Insert the “ICVerify 4.0.0” CD into the CD-ROM of the device, wait for the “ICVerify Installation” window to appear, and proceed to step #5 below.

    b. Remove the CD and return it to its case upon the completion of this document.

    c. Proceed to Step #5 below.

4. Run the “ICVerifyInstall.exe” file.

5. Left-click the “Install All Applications” option of the “ICVerify Installation” window.

6. If prompted to continue without closing applications left-click “Yes”.

7. Left-click “Next” on the “Welcome Screen” window.

8. Left-click “Yes” on the “License Agreement” window.

9. Left-click “Next” on the “Choose Destination Location” window.

10. If prompted to install .NET follow these steps:

    a. Left-click “Yes”.

    b. Left-click “Yes”.

    c. Wait for the extraction to finish. This may take several minutes with no sign of activity at certain points.

    d. Left-click “I Agree”.

    e. Left-click “Install”.

    f. Wait for the install to finish. This may take several minutes with no sign of activity at certain points.

    g. Left-click “OK”.

11. Left-click “Next” on the second “Choose Destination Location” window.

12. Left-click “Next” on the “User Manager Access” window.

13. Left-click “No” on the “Question” window.
14. Left-click “Next” on the “Start Copying Files” window.
15. Wait for the install to finish. This may take several minutes with no sign of activity at certain points.
16. Left-click “No” on the “Question” window.
17. Left-click “Next” on the “Select Program Folder” window.
18. Left-click “Yes” on the “Question” window.
19. Left-click “Next” on the “User Manager Install” window.
20. Left-click “Yes” on the “License Agreement” window.
21. Left-click “Next” on the “Choose Destination Location” window.
22. Left-click “Next” on the “Setup Type” window.
23. Left-click “Next” on the “User Manager Access” window.
24. If the “Microsoft SQL Server Desktop Engine” install starts wait for it to finish. This may take several minutes with no sign of activity at certain points.
25. Left-click “Next” on the “Select Program Folder” window.
26. Left-click “Next” on the “Start Copying Files” window.
27. Wait for the install to finish. This may take several minutes with no sign of activity at certain points.
28. Left-click “Finish”.
29. Wait for the device to reboot.
30. Left-click “OK” on the “Information” window.
31. Wait for the black command window to close automatically. This may take several minutes with no sign of activity at certain points.
32. Left-click “OK” on the second “Information” window.
33. Left-click “OK” on the third “Information” window.
34. Left-click “No” on the “Configuration Diskette” window.
35. Left-click “Yes” on the “Question” window.

36. Enter the following information on the “Login” window:

    Username: sysadmin
    Password: administrator1

37. Left-click “OK” on the “Login” window.

38. Left-click “OK” on the “ICVerify Setup” window.

39. Enter the following information on the “Change Password” window:

    Old Password: administrator1
    New Password: administrator2
    Confirm New Password: administrator2

40. Left-click “OK” on the “Change Password” window.

41. Left-click “OK” on the “Changed Successfully” window.

42. If the “ICVERIFY Setup Wizard” is not displayed:

- Select “Setup Wizard” from the file menu of the “ICVerify Setup” window.

- If the “ICVerify Setup” window is not available either then open it manually. From the taskbar select “Start” **>** “Programs” **>** “ICVERIFY for Windows” **>** “ICVERIFY Setup”

43. Proceed through the following screens entering the merchant account and site information where indicated. If you need help with the setups you may call ICVerify’s Support at 1-800-666-5777.

- When entering authorization and settlement phone numbers DO NOT use spaces or hyphens. Example: 18888675309

- Type of business should always be selected/entered as “Retail”

44. If configuring ICVerify for high speed internet processing then skip to step #47 below.

45. Stop once you reach the “Modem Setup” screen (see **Figure 4.0.0-1** below).

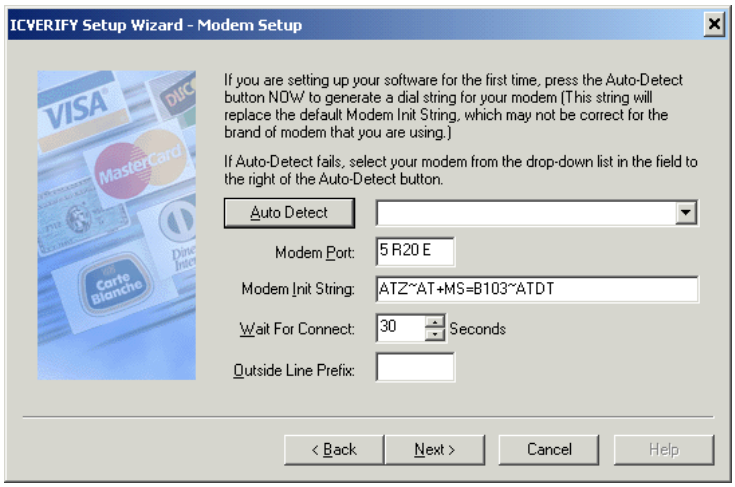

Figure 4.0.0-1: Modem Setup

46. Enter the “Modem Port” and “Modem Init String” as detailed below (DO NOT use “Auto Detect”):

These are the typical settings for listed devices. If the modem port value found using the procedure in the installation requirements section is different, then use that value.

Device	Typical Modem Port	Retries	Parity
AMTT-CS	5	R3	E
Touch&Go	5	R3	E
CAWIV-iC	3 or 4	R3	E

Note: Enter a space between each option in the “Modem Port” field.
Example: **5 R3 E**

The Modem Init String: **ATZ~AT+MS=B103~ATDT**

47. Left-click “Next” to proceed to the “Validation Code” window (see **Figure 4.0.0-2** below).

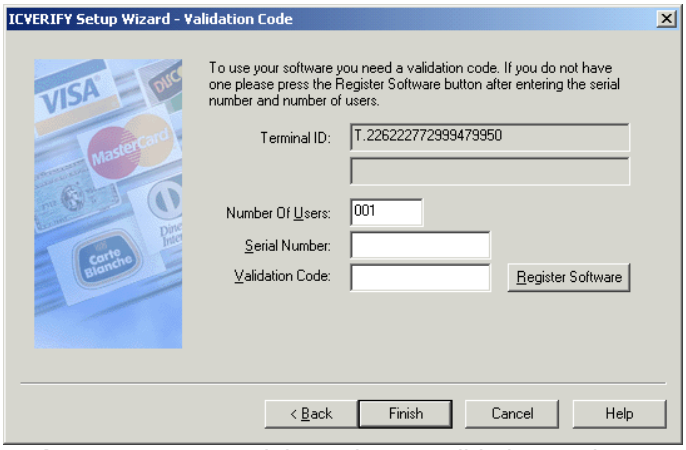

Figure 4.0.0-2: Serial Number & Validation Code

48. Refer to the ICVerify product box to locate the serial number for entry in the Serial Number field on the screen below.

49. Call ICVerify’s support line to receive a validation code at 1-877-271-2653.

50. Left-click “Finish” on the proceeding windows to complete the installation.

51. Close all remaining open windows.

52. If prompted to save changes select “Yes”.

ICVERIFY 4.0.2 INSTALLATION

1. Insert the “ICVerify 4.0” CD into the CD-ROM of the device, wait for the “ICVerify Installation” window to appear, and proceed to the next step. If the installation window does not appear, open windows explorer and run the “ICVerifyInstall.exe” file on the CD.
2. Left-click the “Install All Applications” option of the “ICVerify Installation” window.
3. If prompted to continue without closing applications left-click “Yes”.
4. Left-click “Next” on the “Welcome Screen” window.
5. Left-click “Yes” on the “License Agreement” window.
6. Left-click “Next” on the “Choose Destination Location” window.
7. If prompted to install .NET follow these steps:
    a. Left-click “Yes”.
    b. Left-click “Yes”.
    c. Wait for the extraction to finish. This may take several minutes with no sign of activity at certain points.
    d. Left-click “I Agree”.
    e. Left-click “Install”.
    f. Wait for the install to finish. This may take several minutes with no sign of activity at certain points.
    g. Left-click “OK”.
8. Left-click “Next” on the second “Choose Destination Location” window.
9. Left-click “Next” on the “User Manager Access” window.
10. Left-click “No” on the “Question” window.
11. Left-click “Next” on the “Start Copying Files” window.
12. Wait for the install to finish. This may take several minutes with no sign of activity at certain points.
13. Left-click “No” on the “Question” window.
14. Left-click “Next” on the “Select Program Folder” window.
15. Left-click “Yes” on the “Question” window.

16. Left-click “Next” on the “User Manager Install” window.
17. Left-click “Yes” on the “License Agreement” window.
18. Left-click “Next” on the “Choose Destination Location” window.
19. Left-click “Next” on the “Setup Type” window.
20. Left-click “Next” on the “User Manager Access” window.
21. If the “Microsoft SQL Server Desktop Engine” install starts wait for it to finish. This may take several minutes with no sign of activity at certain points.
22. Left-click “Next” on the “Select Program Folder” window.
23. Left-click “Next” on the “Start Copying Files” window.
24. Wait for the install to finish. This may take several minutes with no sign of activity at certain points.
25. Left-click “Finish”.
26. Wait for the device to reboot.
27. Left-click “OK” on the “Information” window.
28. Wait for the black command window to close automatically. This may take several minutes with no sign of activity at certain points.
29. Left-click “OK” on the second “Information” window.
30. Left-click “OK” on the third “Information” window.
31. Left-click “No” on the “Configuration Diskette” window.
32. Left-click “Yes” on the “Question” window.

33. Enter the following information on the “Login” window:

    Username: sysadmin
    Password: administrator1

34. Left-click “OK” on the “Login” window.

35. Left-click “OK” on the “ICVerify Setup” window.

36. Enter the following information on the “Change Password” window:

    Old Password: administrator1
    New Password: administrator2
    Confirm New Password: administrator2

37. Left-click “OK” on the “Change Password” window.

38. Left-click “OK” on the “Changed Successfully” window.

39. If the “ICVERIFY Setup Wizard” is not displayed:

- Select “Setup Wizard” from the file menu of the “ICVerify Setup” window.

- If the “ICVerify Setup” window is not available either then open it manually. From the taskbar select “Start” **>** “Programs” **>** “ICVERIFY for Windows” **>** “ICVERIFY Setup”

40. Proceed through the following screens entering the merchant account and site information where indicated. If you need help with the setups you may call ICVerify’s Support at 1-800-666-5777.

- When entering authorization and settlement phone numbers DO NOT use spaces or hyphens. Example: 18888675309

- Type of business should always be selected/entered as “Retail”

41. If configuring ICVerify for high speed internet processing then skip to step #47 below.

42. Stop once you reach the “Modem Setup” screen (see **Figure 4.0.2-1** below).

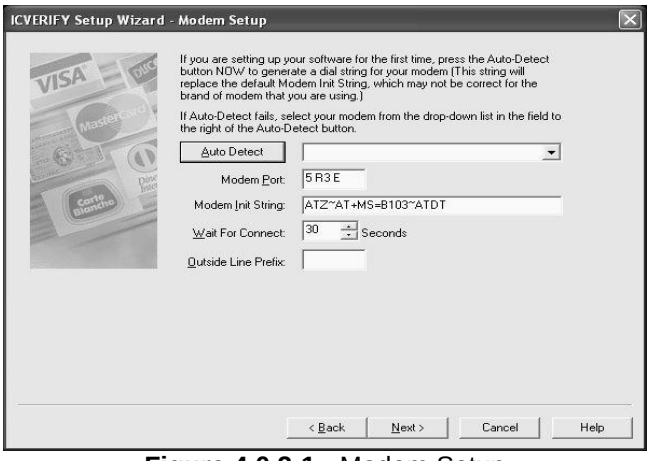

Figure 4.0.2-1: Modem Setup

43. Enter the “Modem Port” and “Modem Init String” as detailed below (DO NOT use “Auto Detect”):

These are the typical settings for listed devices. If the modem port value found using the procedure in the installation requirements section is different, then use that value.

Device	Typical Modem Port	Retries	Parity
AMTT-CS	5	R3	E
Touch&Go	5	R3	E
CAWIV-iC	3 or 4	R3	E

Note: Enter a space between each option in the “Modem Port” field.
Example: **5 R3 E**

The Modem Init String: **ATZ~AT+MS=B103~ATDT**

44. Left-click “Next” to proceed to the “Validation Code” window (see **Figure 4.0.2-2** below).

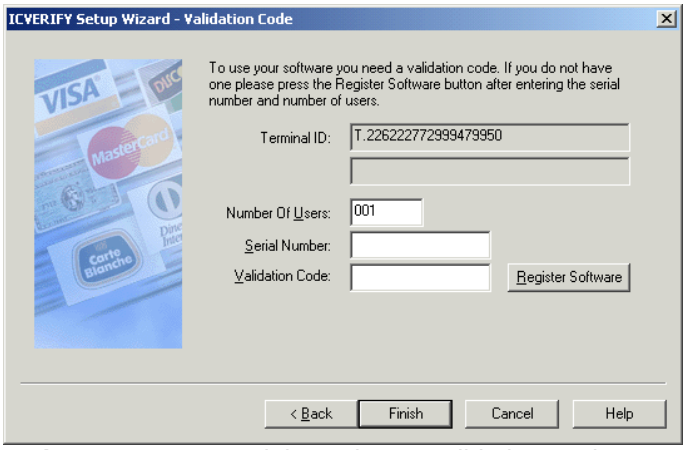

Figure 4.0.2-2: Serial Number & Validation Code

45. Refer to the ICVerify product box to locate the serial number for entry in the Serial Number field on the screen below.

46. Call ICVerify’s support line to receive a validation code at 1-877-271-2653.

47. Left-click “Finish” on the proceeding windows to complete the installation.

48. Close all remaining open windows.

49. If prompted to save changes select “Yes”.

ICVERIFY 4.0.3 INSTALLATION

1. Insert the “ICVerify 4.0” CD into the CD-ROM of the device, wait for the “ICVerify Installation” window to appear, and proceed to the next step. If the installation window does not appear, open windows explorer and run the “ICVerifyInstall.exe” file on the CD.
2. Left-click the “Install All Applications” option of the “ICVerify Installation” window.
3. If prompted to continue without closing applications left-click “Yes”.
4. Left-click “Next” on the “Welcome Screen” window.
5. Left-click “Yes” on the “License Agreement” window.
6. Left-click “Next” on the “Choose Destination Location” window.
7. If prompted to install .NET follow these steps:
    a. Left-click “Yes”.
    b. Left-click “Yes”.
    c. Wait for the extraction to finish. This may take several minutes with no sign of activity at certain points.
    d. Left-click “I Agree”.
    e. Left-click “Install”.
    f. Wait for the install to finish. This may take several minutes with no sign of activity at certain points.
    g. Left-click “OK”.
8. Left-click “Next” on the second “Choose Destination Location” window.
9. Left-click “Next” on the “User Manager Access” window.
10. Left-click “No” on the “Question” window.
11. Left-click “Next” on the “Start Copying Files” window.
12. Wait for the install to finish. This may take several minutes with no sign of activity at certain points.
13. Left-click “No” on the “Question” window.
14. Left-click “Next” on the “Select Program Folder” window.
15. Left-click “Yes” on the “Question” window.

16. Left-click “Next” on the “User Manager Install” window.
17. Left-click “Yes” on the “License Agreement” window.
18. Left-click “Next” on the “Choose Destination Location” window.
19. Left-click “Next” on the “Setup Type” window.
20. Left-click “Next” on the “User Manager Access” window.
21. If the “Microsoft SQL Server Desktop Engine” install starts wait for it to finish. This may take several minutes with no sign of activity at certain points.
22. Left-click “Next” on the “Select Program Folder” window.
23. Left-click “Next” on the “Start Copying Files” window.
24. Wait for the install to finish. This may take several minutes with no sign of activity at certain points.
25. Left-click “Finish”.
26. Wait for the device to reboot.
27. Left-click “OK” on the “Information” window.
28. Wait for the black command window to close automatically. This may take several minutes with no sign of activity at certain points.
29. Left-click “OK” on the second “Information” window.
30. Left-click “OK” on the third “Information” window.
31. Left-click “No” on the “Configuration Diskette” window.
32. Left-click “Yes” on the “Question” window.

33. Enter the following information on the “Login” window:

    Username: sysadmin
    Password: administrator1

34. Left-click “OK” on the “Login” window.

35. Left-click “OK” on the “ICVerify Setup” window.

36. Enter the following information on the “Change Password” window:

    Old Password: administrator1
    New Password: administrator2
    Confirm New Password: administrator2

37. Left-click “OK” on the “Change Password” window.

38. Left-click “OK” on the “Changed Successfully” window.

39. If the “ICVERIFY Setup Wizard” is not displayed:

- Select “Setup Wizard” from the file menu of the “ICVerify Setup” window.

- If the “ICVerify Setup” window is not available either then open it manually. From the taskbar select “Start” **>** “Programs” **>** “ICVERIFY for Windows” **>** “ICVERIFY Setup”

40. Proceed through the following screens entering the merchant account and site information where indicated. If you need help with the setups you may call ICVerify’s Support at 1-800-666-5777.

- When entering authorization and settlement phone numbers DO NOT use spaces or hyphens. Example: 18888675309

- Type of business should always be selected/entered as “Retail”

41. If configuring ICVerify for high speed internet processing then skip to step #47 below.

42. Stop once you reach the “Modem Setup” screen (see **Figure 4.0.3-1** below).

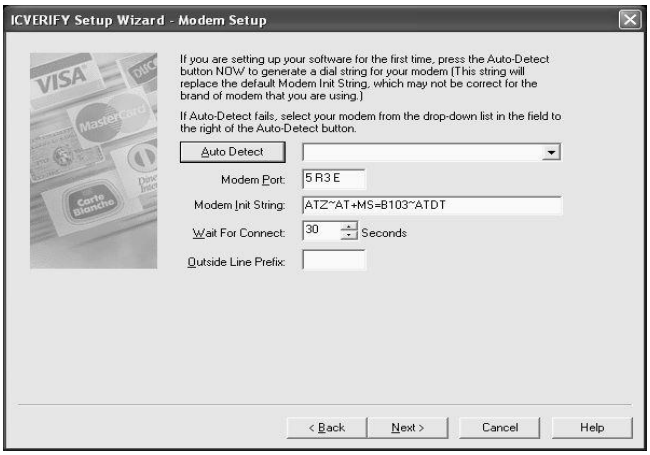

Figure 4.0.3-1: Modem Setup

43. Enter the “Modem Port” and “Modem Init String” as detailed below (DO NOT use “Auto Detect”):

These are the typical settings for listed devices. If the modem port value found using the procedure in the installation requirements section is different, then use that value.

Device	Typical Modem Port	Retries	Parity
AMTT-CS	5	R3	E
Touch&Go	5	R3	E
CAWIV-iC	3 or 4	R3	E

Note: Enter a space between each option in the “Modem Port” field.
Example: **5 R3 E**

The Modem Init String: **ATZ~AT+MS=B103~ATDT**

44. Left-click “Next” to proceed to the “Validation Code” window (see **Figure 4.0.3-2** below).

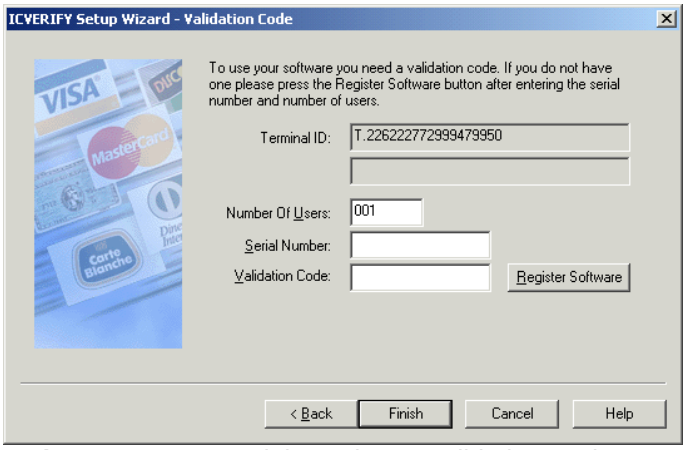

Figure 4.0.3-2: Serial Number & Validation Code

45. Refer to the ICVerify product box to locate the serial number for entry in the Serial Number field on the screen below.

46. Call ICVerify’s support line to receive a validation code at 1-877-271-2653.

47. Left-click “Finish” on the proceeding windows to complete the installation.

48. Close all remaining open windows.

49. If prompted to save changes select “Yes”.

ICVERIFY 4.0.3 SP2 INSTALLATION

1. Insert the “ICVerify 4.0” CD into the CD-ROM of the device, wait for the “ICVerify Installation” window to appear, and proceed to the next step. If the installation window does not appear, open windows explorer and run the “ICVerifyInstall.exe” file on the CD.

2. Left-click the “Install All Applications” option of the “ICVerify Installation” window.

3. If prompted to continue without closing applications left-click “Yes”.

4. Left-click “Next” on the “Welcome Screen” window.

5. Left-click “Yes” on the “License Agreement” window.

6. Left-click “Next” on the “Choose Destination Location” window.

7. Left-click “Next” on the second “Choose Destination Location” window.

8. Click the appropriate option on the Select Processor Access window. If you will be using broadband internet access, choose “This computer is internet capable”, otherwise choose the dial-up modem option. Then Left-click “Next”

9. Left-Click “Next” on the User Manage Access window.

10. If prompted to install .NET follow these steps:

    h. Left-click “Yes”.

    i. Left-click “Yes”.

    j. Wait for the extraction to finish. This may take several minutes with no sign of activity at certain points.

    k. Left-click “I Agree”.

    l. Left-click “Install”.

    m. Wait for the install to finish. This may take several minutes with no sign of activity at certain points.

    n. Left-click “OK”.

11. Wait for the install to finish. This may take several minutes with no sign of activity at certain points.

12. Left-click “No” on the “Question” window.

13. Left-click “Next” on the “Select Program Folder” window.

14. Left-click “No” on the “Question” window.

15. If prompted to continue without closing applications left-click “Yes”.

16. Left-click “Next” on the “User Manager Install” window.

17. Left-click “Yes” on the “License Agreement” window.

18. Left-click “Next” on the “Choose Destination Location” window.

19. Left-click “Next” on the “Setup Type” window. There may be a delay after doing this as Windows Installer service is updated, wait for the next window to be displayed.

20. Left-click “Next” on the “User Manager Access” window.

21. If the “Microsoft SQL Server 2005” installation starts, wait for it to finish. This may take several minutes with no sign of activity at certain points.

22. Left-click “Next” on the “Select Program Folder” window.

23. Left-click “Next” on the “Start Copying Files” window.

24. Wait for the install to finish. This may take several minutes with no sign of activity at certain points.

25. Left-click “Finish”.

26. Wait for the device to reboot.

27. A blank command window may be displayed with the title “C:\windows\system32\net.exe” this window may remain open without any activity for several minutes, wait for it to close.

28. Left-click “OK” on the “Information” window.

29. Another blank command window may be displayed, wait for it to close automatically. This may take several minutes with no sign of activity at certain points.

30. Left-click “OK” on the second “Information” window.

31. Left-click “OK” on the third “Information” window.

32. Left-click “No” on the “Configuration Diskette” window.

33. Left-click “Yes” on the “Question” window.

34. Enter the following information on the “Login” window:

    Username: sysadmin
    Password: administrator1

35. Left-click “OK” on the “Login” window.

36. Left-click “OK” on the “ICVerify Setup” window.

37. Enter the following information on the “Change Password” window:

    Old Password: administrator1
    New Password: administrator2
    Confirm New Password: administrator2

38. Left-click “OK” on the “Change Password” window.

39. Left-click “OK” on the “Changed Successfully” window.

40. If the “ICVERIFY Setup Wizard” is not displayed:

- Select “Setup Wizard” from the file menu of the “ICVerify Setup” window.

- If the “ICVerify Setup” window is not available either then open it manually. From the taskbar select “Start” **>** “Programs” **>** “ICVERIFY for Windows” **>** “ICVERIFY Setup”

41. Proceed through the following screens entering the merchant account and site information where indicated. If you need help with the setups, you may call ICVerify’s Support at 1-800-666-5777.

- When entering authorization and settlement phone numbers DO NOT use spaces or hyphens. Example: 18888675309

- Type of business should always be selected/entered as “Retail”

42. If configuring ICVerify for high speed internet processing then skip to step #47 below.

43. Stop once you reach the “Modem Setup” screen (see **Figure 4.0.3-1** below).

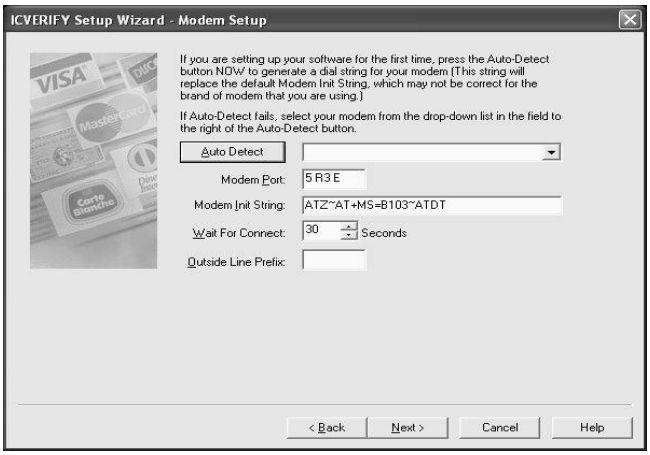

Figure 4.0.3-1: Modem Setup

44. Enter the “Modem Port” and “Modem Init String” as detailed below (DO NOT use “Auto Detect”):

These are the typical settings for listed devices. If the modem port value found using the procedure in the installation requirements section is different, then use that value.

Device	Typical Modem Port	Retries	Parity
AMTT-CS	5	R3	E
Touch&Go	5	R3	E
CAWIV-iC	3 or 4	R3	E

Note: Enter a space between each option in the “Modem Port” field.
Example: **5 R3 E**

The Modem Init String: **ATZ~AT+MS=B103~ATDT**

45. Left-click “Next” to proceed to the “Validation Code” window (see **Figure 4.0.3-2** below).

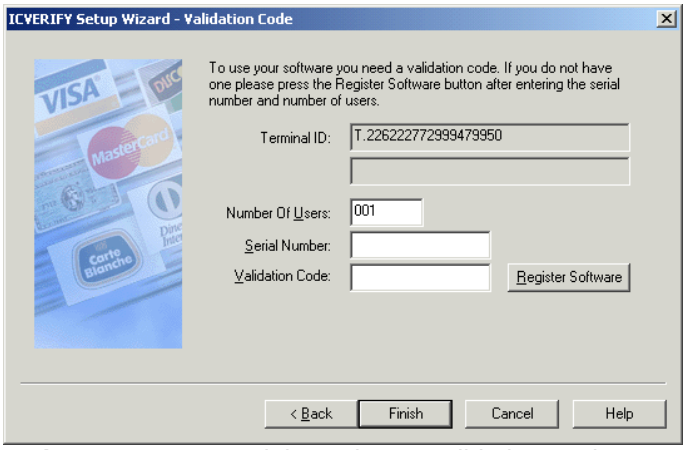

Figure 4.0.3-2: Serial Number & Validation Code

46. Refer to the ICVerify product box to locate the serial number for entry in the Serial Number field on the screen below.

47. Call ICVerify’s support line to receive a validation code at 1-877-271-2653.

48. Left-click “Finish” on the proceeding windows to complete the installation.

49. Close all remaining open windows.

If prompted to save changes select “Yes”.

CREDIT CHARGE SERVER CONFIGURATION / OPERATION

The Credit Charge Server provides the control and organization of credit card charge transactions.

FIRST-TIME CONFIGURATION

When first setting up the site equipment for credit card operation, it is necessary to configure the Credit Charge Server as described below.

IMPORTANT: BE SURE THE ICVERIFY CONFIGURATION HAS BEEN COMPLETED FIRST. THE CREDIT CHARGE SERVER SHOULD NOT BE CONFIGURED UNTIL ICVERIFY HAS BEEN SETUP.

1. Go to the Windows desktop, closing the host AMTT-CS.

2. Open the Credit Charge Server Options by right-clicking on the CCS icon (looks like a rain cloud over a car), located in the task bar at the lower-right corner of the desktop (next to the time), and selecting Options. **Note:** You may need to pull your mouse to the bottom of the screen to see the task bar.

3. Log in with the default User Name (3) and Password (3).

4. Select the ICVERIFY Options tab and confirm that the selected ICVERIFY Version reflects the version of ICVERIFY that has been configured. **Note:** The CCS attempts to auto detect the configured ICVERIFY version the first time it is started.

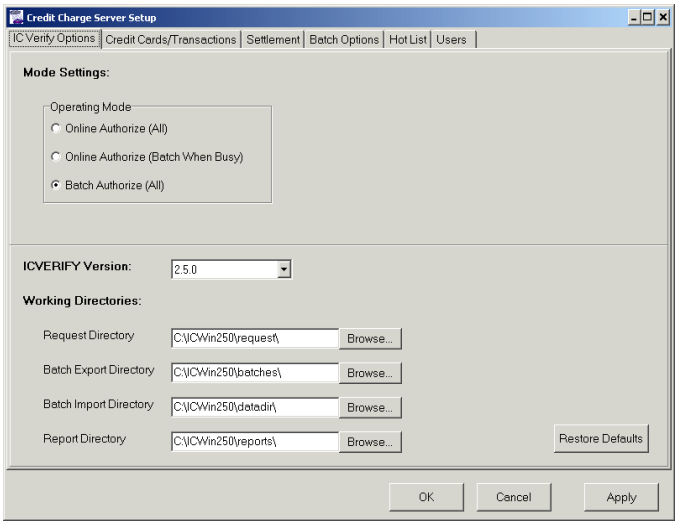

5. Point and click on the Credit Cards/Transactions tab. Then click the box next to each of the credit card types that will be accepted (**MasterCard, Visa, American Express and/or Discover only**).

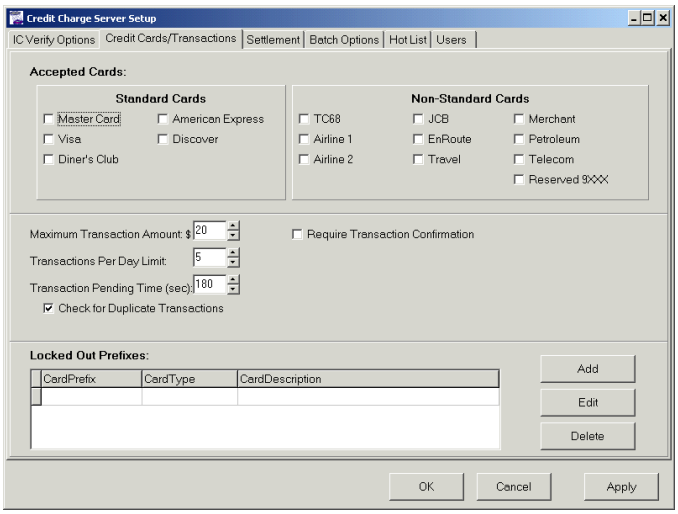

6. After you have checked the boxes for the credit card types accepted, select OK.

7. Record the type of credit cards accepted for tracking purposes.

8. Open the ICVERIFY Multi-User Request File Processor window by clicking on the so-named box in the task bar. You may need to pull your mouse to the bottom of the screen to see the task bar. Confirm that the Initialization String is "\o", and that the Request Directory reflects the identical version path that was configured for the ICVERIFY.

IMPORTANT: CHECK THE REQUEST DIRECTORY INFORMATION CLOSELY. IF THE PATH INDICATED IN THE REQUEST DIRECTORY FIELD IS NOT IDENTICAL TO THE PATH CONFIGURED FOR THE ICVERIFY THE CREDIT CHARGE SERVER WILL NOT OPERATE.

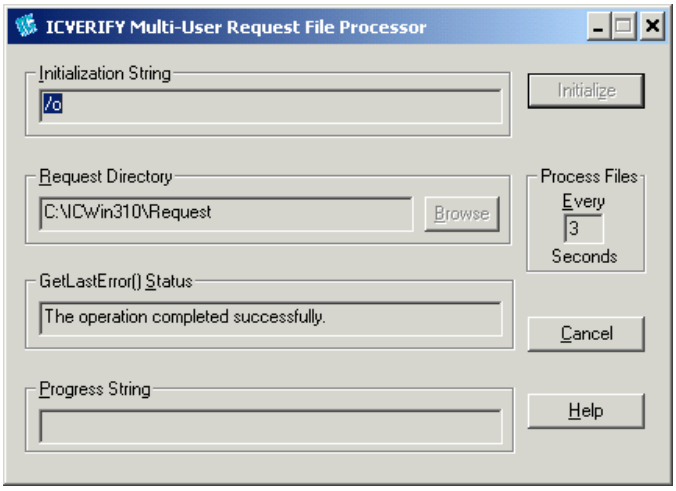

9. Reboot the PC.
10.

11. Make sure the host AMTT-CS or Touch & Go device is properly configured to send charge requests to the local subnet/node. Perform a test transaction on the host AMTT-CS or Touch & Go device to ensure the application is able to communicate with the CCS. Keep the receipt.

12. Make sure all other AMTT-CS or Touch & Go devices are properly configured to send charge requests to AMTT-CS or Touch & Go device on which the CCS is running. Perform a test transaction at each of these devices to ensure the applications are able to communicate with the CCS. Keep the receipts.

13. Go to the Windows desktop, closing the host AMTT-CS or Touch & Go application if necessary.

14. Open the CCS. **Note:** To open CCS, right-click on the CCS tray icon, located in the task bar at the bottom of the desktop. The icon is on the right side of the screen next to the time display. From the menu that appears when you right-click, select Open. You may need to pull your mouse to the bottom of the screen to see the task bar.

15. Log in with the site User Name (3) and Password (3).

16. Review the Current Sale Transactions window. There should be one transaction for each test that was performed.

17. If more than one test was performed, highlight each of the additional test transactions in the Current Sale Transactions window and then click on the **Delete** Transaction button to delete the test transactions. **Be sure to keep one test transaction, and the corresponding receipt so that you will be able to verify the system is operating correctly. Use the information provided on the receipt to identify and delete the test transaction later when testing is completed.**

18. Click on the CLOSE BATCH button. If prompted to continue with batch closure due to last transaction pending, select YES. This removes the transaction from the Current Sale Transactions window. You should now see one closed batch in the Closed Batches window with a Status of Closed (Not Processed).

19. Review the current CCS state, located at the bottom of the CCS window. It will be “Idle”. Click on the PROCESS ALL BATCHES button. The CCS state will change to “Processing Batches…” and the closed batch Status will change to “Processing”. If you listen closely you should hear to modem dialing. When processing has completed, the CCS state changes back to “Idle” and the closed batch Status should now be “Processed (Not Settled)”.

20. Click on the SETTLE BATCHES button. The CCS state changes to “Settling Transactions.” If you listen closely you should hear to modem dialing. When settlement has completed, the CCS state changes back to “Idle” and the closed batch Status should now be “Settled”.

21. Close (hide) the CCS by clicking on the **X** in the upper right hand corner of the main CCS window. This action does not exit the CCS—it simply hides the CCS from view. Restart the host application if necessary.

ADDITIONAL SETTINGS

The following settings may be completed after initial configuration procedures have been completed. You will need to log onto the Credit Charge Server.

IMPORTANT: CHANGES SHOULD ONLY BE MADE AFTER CONSULTING WITH RYKO MFG. CO.

IMPORTANT: BE SURE THE ICVERIFY CONFIGURATION HAS BEEN COMPLETED FIRST. THE CREDIT CHARGE SERVER SHOULD NOT BE CONFIGURED UNTIL ICVERIFY HAS BEEN SETUP.

Note: Options and settings will vary depending on the CCS version installed.

HOST/REMOTE *(V3.1.7, UNDER CONSTRUCTION) (TAB)*

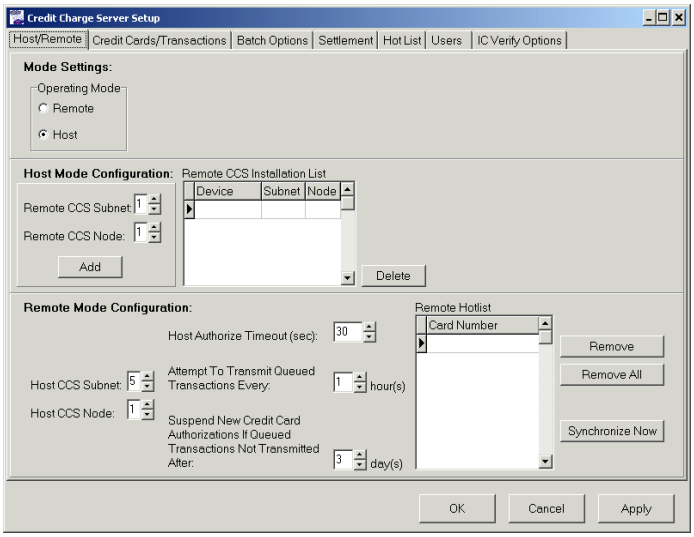

Note: Currently, one AMTT-CS machine per site is configured to run the Credit Charge Server, unless a Touch & Go system is also present, in which case only the T&G is configured to run the CCS. All AMTT-CS and T&G devices setup to send credit card charge requests to the subnet and node on which the CCS is running.

Note: None of the following settings have been fully implemented at this time.

SETTING OR SELECTION	DESCRIPTION
MODE SETTINGS	
Operating Mode	A host CCS will be configured to run on one AMTT-CS machine per site (or instead T&G if present). All other AMTT-CS and T&G devices that are not configured as the host CCS will be configured as a remote CCS.
HOST MODE CONFIGURATION	
Subnet/Node/Add	Each remote CCS needs to be identified.
Delete	Removes a remote CCS that is no longer in use.
REMOTE MODE CONFIGURATION	
Subnet/Node	The host CCS needs to be identified.
Host Authorize Timeout	Time to wait for credit response from host CCS before the remote CCS will respond directly to charge requests from the local AMTT-CS or T&G.
Attempt to Transmit Queued Transactions	Specifies when to attempt the transmission of queued transactions to the host CCS.
Suspend New Credit Card Authorizations	Prevents a remote CCS from accepting and queuing transactions indefinitely if some type of problem between the remote and host CCS occurs.
REMOTE HOTLIST	
Remove/Remove All	Allows one or more card numbers to be immediately removed from the remote CCS hotlist.
Synchronize Now	Allows for the immediate synchronization of the remote CCS hotlist with the host CCS hotlist. The remote CCS hotlist will be configured to automatically synchronize with the host CCS hotlist daily.

CREDIT CARDS/TRANSACTIONS *(TAB)*

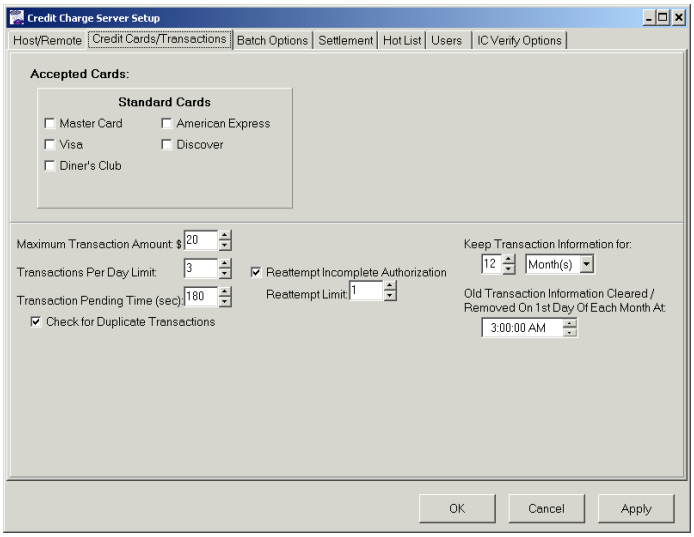

SETTING OR SELECTION	DESCRIPTION
Accepted Cards / Standard Cards	These settings enable or disable the type of standard credit cards accepted. To Enable, point and click in the box to the left of the desired selections to insert a ✓. **Note:** The CCS currently supports MasterCard, Visa, American Express, and Discover.
Maximum Transaction Amount	This setting limits the dollar amount of charge requests that will be accepted. Charge requests greater than this amount will be declined. Use the ▲ ▼ arrows to the right of the pane to increase or decrease the amount. **Note:** This amount must be at least as much as the Touch & Go's Pre-Authorize Card Amount (when present).
Transactions Per Day Limit	This setting limits the number of charge requests per day for the same card number that will be accepted. Requests that exceed this number will be declined. Use the ▲ ▼ arrows to the right of the pane to increase or decrease the amount. **Note:** One additional transaction per day is allowed for Touch & Go terminal transactions.
Transaction Pending Time	This setting determines how much time must elapse since the most recent transaction was received before the open batch will close automatically. **Note:** Used for the purpose of transaction cancellation.
Check for Duplicate Transactions	This setting enables or disables comparing of new transactions with other recent transactions to ensure exact duplicates are not added. To Enable, point and click in the box to the left of the desired selections to insert a ✓.
Require Transaction Confirmation (hidden)	This setting enables or disables requiring a confirmation message be received before a transaction is added. **Not currently used.**
Reattempt Incomplete Authorization (v3.1.7)	When a "PLEASE RETRY" message appears when a transaction is submitted, this setting enables or disables the ability for the transaction to be resubmitted at a later time.
Reattempt Limit (v3.1.7)	This setting determines the number of times an incomplete authorization may be reattempted.
Keep Transaction Information (v3.1.7)	This setting determines how long the monthly ICVERIFY history, request/response, batch, and report files are retained. Also determines how long the customer name and credit card expiration date information is kept in the CCS database.
Old Transaction Information Cleared/Removed (v3.1.7)	This setting determines at what time of day transaction maintenance occurs.

BATCH OPTIONS *(TAB)*

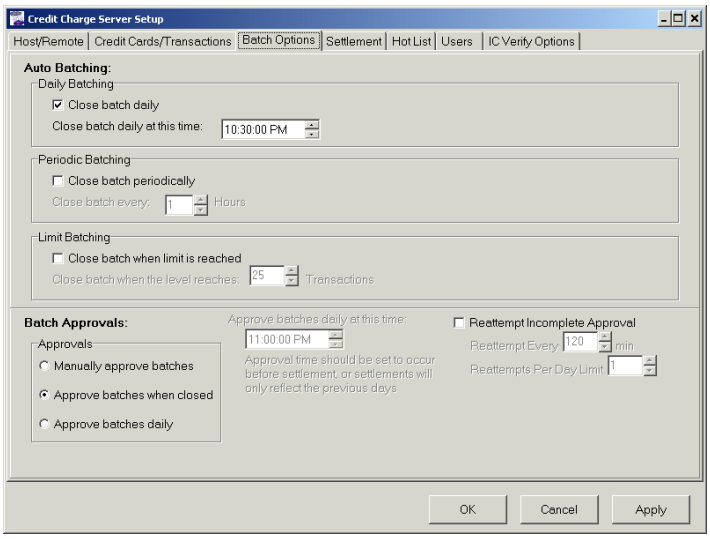

SETTING OR SELECTION	DESCRIPTION
AUTO BATCHING	**Note:** When enabling an Auto Batching selection, be sure to complete both settings for your selection. You must insert a ✓ to Enable the desired setting and enter the information that sets timing or limit parameters.
Daily Batching	
Close batch daily	This setting enables or disables daily batch closure. To Enable, point and click in the box to insert a ✓.
Close batch daily at this time	This setting determines the time of day when daily batch closure occurs. Use the ▲ ▼ arrows to the right of the pane to increase or decrease the time of day.
Periodic Batching	
Close batch periodically	This setting enables or disables periodic batch closure. To Enable, point and click in the box to insert a ✓.
Close batch period	Time period after which batch closure occurs. Use the ▲ ▼ arrows to the right of the pane to increase or decrease the amount of time.
Limit Batching	
Close batch when limit is reached	This setting enables or disables limit batch closure. The batch closes when the number of transactions indicated in CLOSE BATCH LIMIT occurs. To Enable, point and click in the box to insert a ✓.
Close batch limit	Transaction count after which batch closure occurs.

SETTING OR SELECTION	DESCRIPTION
BATCH APPROVALS	
Manually approve batches	Bach processing must be manually performed.
Approve batches when closed	Bach processing occurs immediately following batch closure.
Approve batches daily	Batch processing occurs daily.
Approve batches daily at this time	Time when daily batch processing occurs.
Reattempt Incomplete Approval (v3.1.6)	Enables/disables having the processing of “Supplemental” and “Processing Failed” batches reattempted before the next standard batch approval time.
Reattempt Period (v3.1.6)	Time after which processing for “Supplemental” and “Processing Failed” batches is reattempted.
Reattempts Per Day Limit (v3.1.6)	Number of times per day processing for “Supplemental” and “Processing Failed” batches is reattempted.

SETTLEMENT *(TAB)*

Terminal-based processors require you to connect to the network and submit the open batch (which contains all of the transactions that were previously approved) for settlement before funds from approved transactions are deposited into your account. Host-based processors maintain the open batch for you. The CCS currently supports only terminal-based processors.

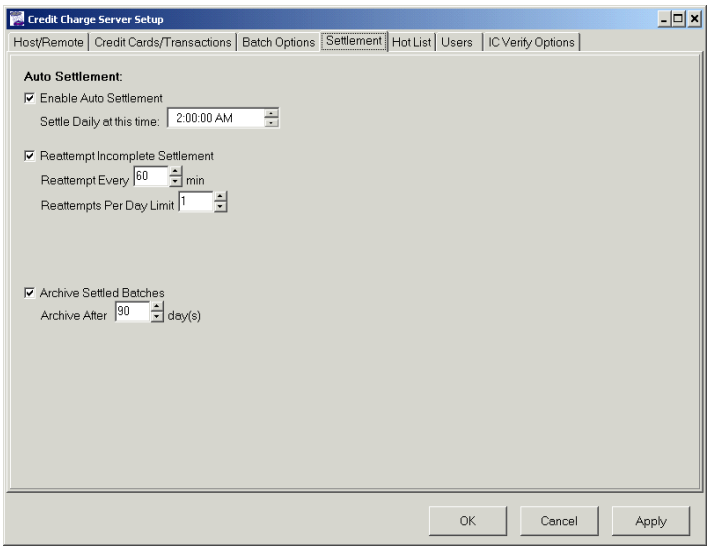

AUTO SETTLEMENT

The Auto Settlement settings determine when and how funding settlement of the charge transactions occurs and how the Credit Charge Server will handle settlement processing failures. These settings also configure the storage of settled batch information for future viewing.

SETTING OR SELECTION	DESCRIPTION
Enable Auto Settlement	This setting enables or disables daily (automatic) settlement. To Enable, point and click in the box to insert a ✓.
Settle Daily at this time	This setting determines the time of day when daily settlement occurs.
Reattempt Incomplete Settlement (v3.1.5)	This setting enables or disables reattempting settlement for "Settlement Timed Out" and "Settlement Failed" batches before the next daily settlement time. To Enable, point and click in the box to insert a ✓.
Reattempt Period (v3.1.5)	This setting determines the amount of time after settlement attempts return with a "Settlement Timed Out" or "Settlement Failed" message that a retry is attempted.
Reattempt Per Day Limit (v3.1.5)	This setting determines the number of times per day settlement for "Settlement Timed Out" and "Settlement Failed" batches is reattempted.
Archive Settled Batches (v3.1.6)	This setting enables or disables archiving settled batches. Archived batches are not automatically displayed in the Closed Batches window. To Enable, point and click in the box to insert a ✓.
Archive Period (v3.1.6)	This setting determines the time after which settled batches are archived.

HOT LIST *(TAB)*

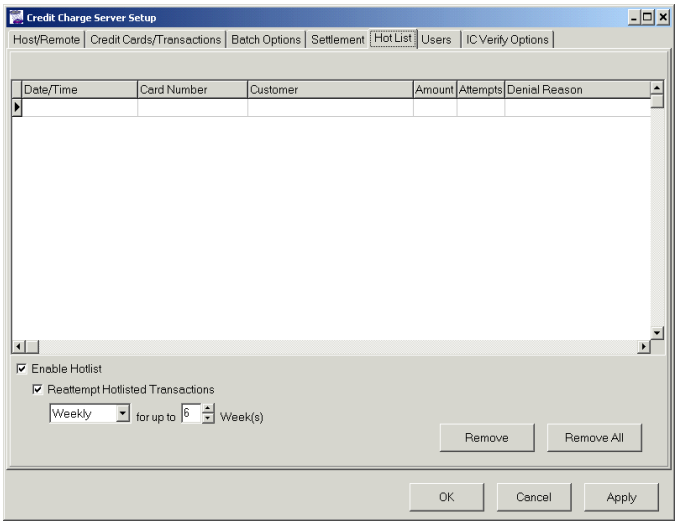

SETTING OR SELECTION	**DESCRIPTION**
Enable Hotlist	This setting enables or disables the hotlisting of transactions that are declined by the processor. To Enable, point and click in the box to insert a ✓.
Reattempt Hotlisted Transactions (v3.1.7)	This setting enables or disables hotlisted transactions to be resubmitted for authorization. Transactions that successfully authorize during a reattempt are removed from the hotlist. To Enable, point and click in the box to insert a ✓.
Hotlist Period/Limit (v3.1.7)	This setting determines the frequency and duration hotlisted transactions are resubmitted for authorization. Transactions that fail to authorize during this timetable will no longer be resubmitted for authorization and will be permanently hotlisted unless manually removed.
Remove/Remove All	This setting allows one or more transactions to be immediately removed from the hotlist.

USERS *(TAB)*

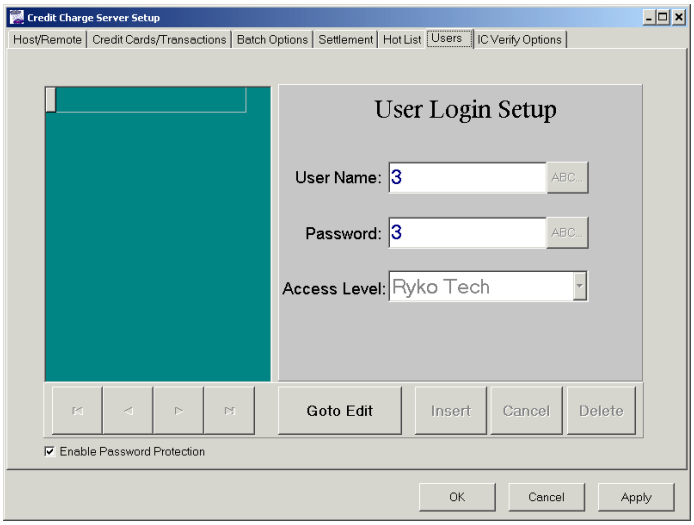

SETTING OR SELECTION	DESCRIPTION
Enable Password Protection	This setting enables or disables the use of a username/password to access the CCS. Four access levels are provided: Cashier, Manager, Owner, and Ryko Tech. The CCS does not currently differentiate between access levels.

IC VERIFY OPTIONS (TAB)

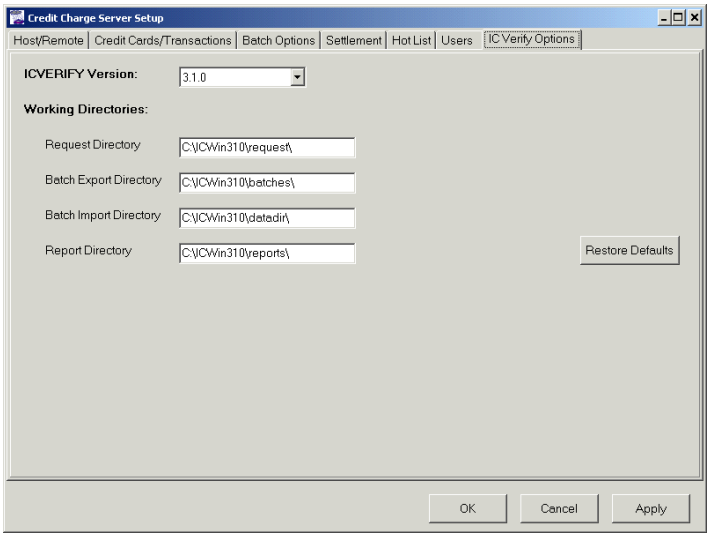

SETTING OR SELECTION	DESCRIPTION
ICVERIFY version	This is the version of ICVerify that is currently configured. The CCS attempts to auto detect the configured ICVERIFY version the first time it is started. The CCS will abort if it cannot detect the presence of one of the following ICVERIFY versions: 2.2.6 2.6.0 2.5.0 3.0.0 2.5.1 3.1.0
Working Directories	These are the working directories for the selected ICVERIFY version. These directories are automatically updated when the selected ICVERIFY version changes, and should not be manually changed.

CREDIT CHARGE SERVER (CCS) OPERATION

The Credit Charge Server (referred to as the CCS) manages the credit charge transactions made at a bay's coin box or at a self-serve credit card terminal. The server organizes the submission of credit transactions for authorization and maintains a record of all activity.

IMPORTANT: BE SURE THE ICVERIFY CONFIGURATION HAS BEEN COMPLETED FIRST. THE CCS SHOULD NOT BE CONFIGURED UNTIL ICVERIFY HAS BEEN SETUP.

OPENING THE CREDIT CHARGE SERVER & LOGGING IN

1. Go to the Windows desktop, closing the host AMTT CS.

2. Open the Credit Charge Server by right-clicking on the CCS tray icon, located in the task bar at the lower-right corner of the desktop (next to the time), and selecting Open. You may need to pull your mouse to the bottom of the screen to see the task bar. The CCS icon looks like a rain cloud over a red car:

3. Log in with the default User Name (3) and Password (3). The Credit Charge Server window will be displayed:

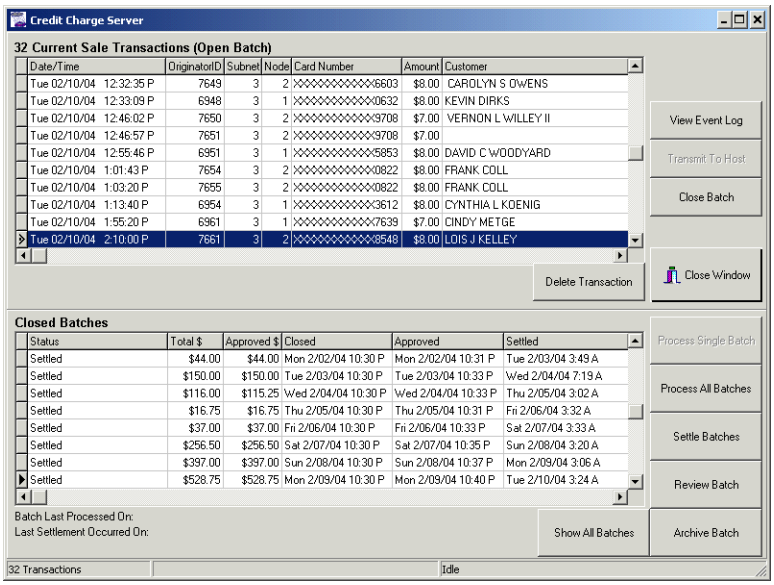

CREDIT CHARGE SERVER FEATURES

CURRENT SALE TRANSACTIONS (OPEN BATCH)

This panel shows transactions that have been pre-approved by the CCS. Transaction information available includes Data/Time, Originator ID, Subnet, Node, Card Number (last four digits only), Amount, and Customer Name (if captured).

- **View Event Log** button (v3.1.7) – Press this button to review the CCS event log. Events that are logged include application start/stop times, charge requests and responses, close batch, process batch, and settlement attempts/completions. C:\Program Files\Ryko\CCServer\Data\EventLog.txt.

- **Transmit To Host** (v3.1.7) – This button is a placeholder for the Remote CCS and has not been implemented.

- **Close Batch button** – Press this button to manually close the open batch. The CCS will prompt for batch closure confirmation if the most recent transaction was just received (see CCS Options: Transaction Pending Time).

- **Delete Transaction button** – Press this button to delete one or more transactions from the open batch. Transactions must be first selected with the mouse. Double-clicking on one or more transactions will also invoke this button. The CCS will prompt for confirmation before the transactions are deleted.

- **Close Window button** (v3.1.7) – Press this button to close (hide) the CCS. This action will not exit the CCS—it simply hides the CCS from view. The CCS may also be closed by clicking on the **X** in the upper right hand corner of the CCS window.

CLOSED BATCHES

This panel shows batches that have been closed. Batch information includes Status, Total Amount, Approved Amount, Closed Date/Time, Approved Date/Time, and Settled Date/Time.

Batch Status

- Closed (Not Processed)
- Processing
- Processing Failed
- Processed (Not Settled)
- Settling
- Settlement Failed
- Settled
- Archived
- Not Processed (Supplemental)
- Settlement Timed Out

- **Process Single Batch** button – Press this button to submit transactions in a single unprocessed batch for authorization. An unprocessed batch must be first selected with the mouse.

- **Process All Batches** button – Press this button to submit transactions in all unprocessed batches for authorization. The status of all unprocessed batches will first be changed to Closed (Not Processed) if not already, and then each unprocessed batch will process individually.

- **Settle Batches** button – Press this button to submit all unsettled batches (transactions) for settlement.

- **Review Batch** button – Press this button to review the transaction level detail for a batch. A batch must first be first selected with the mouse. Double-clicking on a batch will also invoke this button.

- **Archive Batch** button – Press this button to archive a batch. Archiving a batch hides the batch from the default Closed Batches view. The CCS will prompt for archive confirmation of an unprocessed batch, as this will prevent the transactions from being authorized.

- **Show All Batches/Show Recent Batches** button – Press this button once to show all batches, including archived batches, in the Closed Batches panel. Press this button again to show only unarchived batches in the Closed Batches panel.

STATUS BAR TERMS

The Status Bar at the bottom of the window indicates occurrences and processes during CCS operation. Definitions for terms that may appear on the Status Bar during operation are provided below.

TERM	DEFINITION
Transaction Count	Reflects the open batch transaction count.
Application State	Reflects the CCS application state:
Idle	CCS is waiting for charge request.
Processing Transaction	CCS is processing single transaction (Online Authorize mode).
Processing Batches	CCS is processing all unprocessed batches.
Processing Single Batch	CCS is processing single unprocessed batch.
Settling transactions	CCS is settling all authorized transactions.
Generating report	CCS is generating some type of report.
Maintenance	CCS is performing transaction maintenance.

ADDITIONAL SCREENS

EVENT LOG

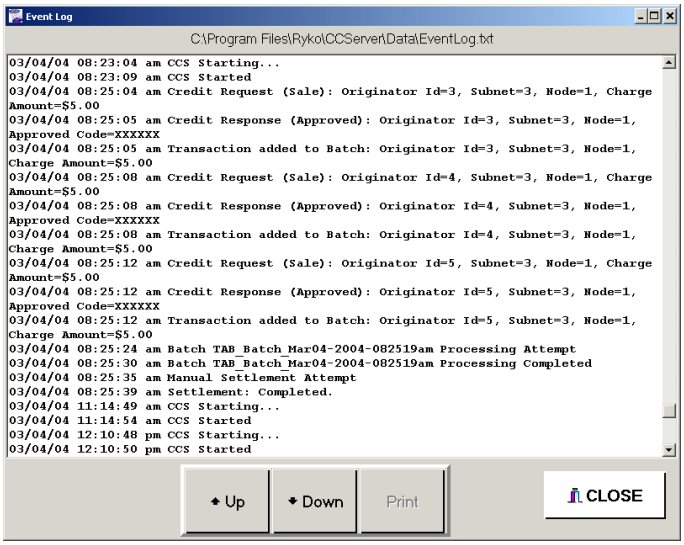

All information in the Event Log may not be shown on the screen at one time. The Up and Down buttons allow you to scroll through the log entries and display remaining information.

BATCH REVIEW

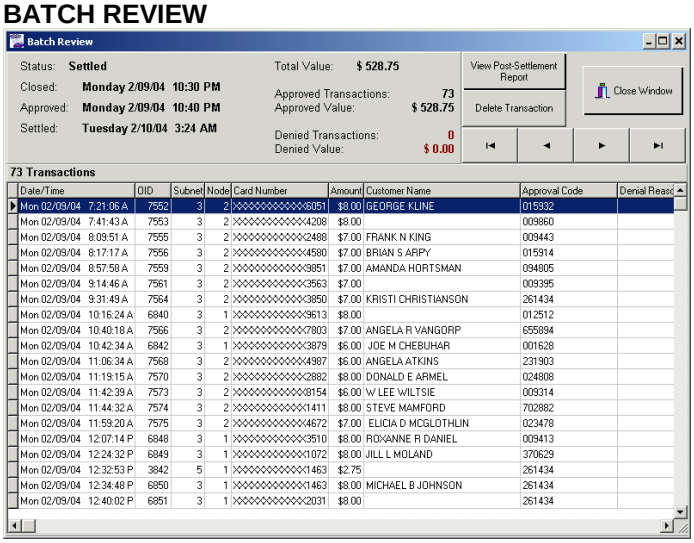

View Pre-/Post-Settlement Report button (v3.1.7) – Press this button to review the ICVERIFY pre- or post-settlement report file.

Delete Transaction button (v3.1.6/v3.1.7) – Press this button to delete one or more transactions from the batch being reviewed. Transactions must be first selected with the mouse. Double-clicking on one or more transactions will also invoke this button. Authorized transactions may not be deleted. The CCS must be idle in order to delete transactions from a batch. The CCS will prompt for confirmation before the transactions are deleted. The CCS will prompt to have the deleted transaction(s) added to the hotlist.

Close Window button (v3.1.7) – Press this button to close the Batch Review window.

CREDIT CHARGE SERVER TROUBLESHOOTING

PREREQUISITES

Before you begin make sure you have the following:

Processing network setup information used to configure the ICVERIFY software for credit card processing.

- ICVERIFY serial number (from the product box or the CD jewel case).
- Telephone and cord.
- Keyboard, mouse, and Y adapter for keyboard/mouse (AMTT-CS only). If a Y adapter is not available, a USB mouse is required.
- Visa or MasterCard.

If necessary, Auth Only test transactions can be submitted directly through the ICVERIFY GUI to more closely monitor the status of the transaction being processed. The Status/Response will display the current status, such as 'CALLING', 'WAITING FOR RESPONSE', 'CONNECTED', 'VERIFYING', 'APPROVED', etc.). Auth Only transactions cannot be settled unless they have been completed using a force transaction. Auth Only transactions are cleared out of the batch each time a settlement is performed:

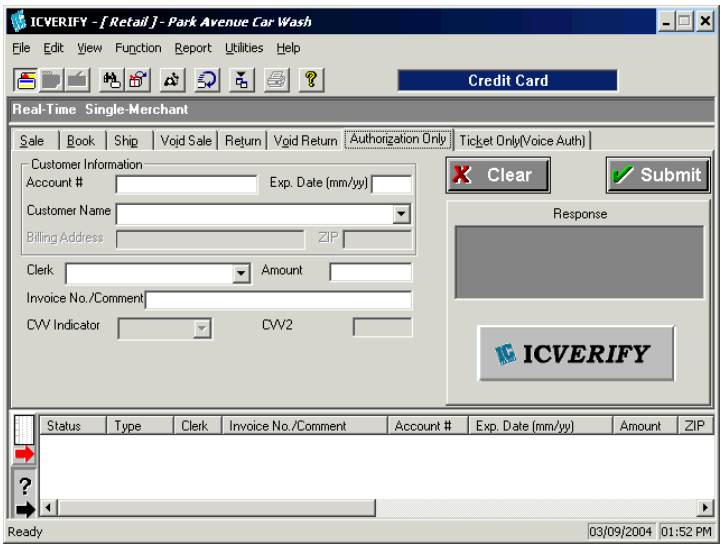
ICVERIFY - [Retail] - Park Avenue Car Wash
File Edit View Function Report Utilities Help
Credit Card
Real-Time Single-Merchant
Sale Book Ship Void Sale Return Void Return Authorization Only Ticket Only(Voice Auth)
Customer Information
Account #
Exp. Date (mm/yy)
Customer Name
Billing Address
ZIP
Clerk
Amount
Invoice No./Comment
CVV Indicator
CVV2
Clear
Submit
Response
ICVERIFY
Status Type Clerk Invoice No./Comment Account # Exp. Date (mm/yy) Amount ZIP
Ready
03/09/2004 01:52 PM

COMMON PROBLEMS/SOLUTIONS

***Problem*:**

ICVERIFY is unable to establish a connection to the Processor.

The CCS never returns to 'Idle' state.

The approved value for every processed batch is $0.00 and/or batches are immediately archived (and therefore hidden) after processing completes.

The status of one or more closed batches is 'Processing Failed', 'Not Processed (Supplemental), 'Settlement Failed', and/or 'Settlement Timed Out', and repeated attempts to manually process and/or settle these batches fail.

Solutions: Most likely, one of the following things is occurring:

There is a problem with the telephone line. Connect a telephone to the modem's PHONE port and check for a dial tone.

The port information in the modem port field is not set correctly. Select Start **>** Settings **>** Control Panel **>** Phone and Modem Options **>** Modem tab. If prompted, fill in the local area code. Select the Modem tab, highlight the Creative Modem Blaster V.92 PCI DI5633, and compare the COM port # listed under the Attached to column with that configured in the ICVERIFY setup. **If additional modem entries are listed but not present, these entries should be removed, as they may prevent the modem that is present from working properly.**

The dial string is not correct for that modem. Double-check the configured dial string. Totally power down and power up the device after changing the dial string. IMPORTANT: Rebooting is *not* sufficient. Power must be shut down and restored.

Dial string to try:

ATZ~AT+MS=B103~ATDT
ATZ~AT+MS=V22,1,300,1200,300,1200~ATV1X4DT
AT%C0\n0&K0DT

The ICVERIFY version is not set properly in the CCS options.

The ICVERIFY Multi-User Request File Processor is not configured properly. If changes are necessary, you will need to close the Credit Charge Server and ICVERIFY Multi-User Request File Processor first.

One or more of the following directories is not present: C:\ICWinXXX\Request, Reports, Batches, Datadir. Create the missing directory or directories.

The Data Disk:\Directory is not set properly in the ICVERIFY setup. It should be DATADIR.

There is a problem with the modem. Try another communication program to dial out with your modem. If other software fails to connect, make sure your modem has been installed properly. If DSL hardware is present, try increasing the number of retries in the modem port field.

The processor setup information within ICVerify is not correct. Run icsetup.exe from the C:\ICWinXXX directory for the configured version of ICVerify. Choose "Setup Wizard" from the file menu and verify all settings. NOTE: A change in these settings will probably require a new validation code from ICVerify.

Problem:

ICVERIFY is able to establish connection with the Processor, but it is receiving incorrect information or rejection of all transactions.

Solutions:

- Review the ICVERIFY answer file (icver001.ans), batch response file and/or ICVERIFY GUI Status/Response. A final Response of f 'Not Approved: [Error Message]' indicates the Processor has rejected the transaction. A final Response of 'Not Approved: Time Out [Reason for timeout]' indicates that there was some sort of communications failure. If the problem is occurring during settlement, also review the Settlement Error Report from the ICVERIFY GUI. Most likely, one of the following things is occurring:

- Input information in ICVERIFY's Processor Setup is incorrect. If this occurs, attempt to rebuild your Setup file or contact the operator's Merchant help desk to confirm the operator's Merchant account information.

- Operator's merchant account is not setup for one or more credit card types that the CCS is configured to accept. If this occurs, have the operator contact the Merchant help desk to have these card types setup.

- The modem hung while processing or settling, and the ICVERIFY history file is corrupt. If this occurs, contact ICVERIFY for help in restoring the history file. **IMPORTANT: Be sure to make a backup copy of the icverifc.000 history file before making any changes.** If this happens frequently, consider replacing the modem.

Problem:

One or more credit card types are not being (pre)-authorized.

Certain credit cards are not being (pre)-authorized.

Solutions:

Make sure the CCS is running.

Check the CCS Event Log to make sure the charge requests are being received, and responses sent. If not, make sure the correct versions of the CCS, Echelon Server, and AMTT-CS/SSCCS are running.

Check the CCS Options to make sure the proper credit card types are enabled.

Check the CCS Hotlist for the credit card number.

Problems:

- The CCS state is 'Idle', but one of the following situations exist:
- Transactions in the open batch (Current Sale Transactions) are not being automatically closed.
- Status of one or more closed batches has not changed in over 48 hours (excluding 'Settled' or 'Archived').

Solution:

Check the CCS options (Batch and Settlement) to make sure the daily batching, approval, and settlement options are configured properly.

Problem:

The CCS will not start.

Solution:

Make sure the Echelon Server and ICVERIFY are installed and configured properly.

Make sure one or more instances of the CCS are not already running. CCS processes that fail to exit gracefully (for whatever reason) may need to be forced to exit by opening the Windows Task Manager (Ctrl+Alt+Del), selecting the Processes tab, highlighting the 'CreditChargeSer' image name, and pressing the End Process button.

Make sure the CCServer database is not corrupt. Close the CCS and then repair and compact the database.

Problem:

One or more authorized or settled transactions needs to be refunded.

Solution:

Review the ICVERIFY help for information on how to perform Void/Credit Void/Cancel Return/Refund Void and/or Credit/Refund/Return transactions from the ICVERIFY GUI.

Initializing & Setting Up the Touch Screen On the AMTT CS

Follow the directions below to ensure the touch screen works properly.

Before following the steps below make sure you have a keyboard & mouse.

If you are initializing & setting up the touch screen on an existing AMTT CS and are not replacing the actual touch screen then the linearization file is already stored on the hard drive. It is located in the directory C:\Installs\Linearization\ . Otherwise, the linearization file is located on the floppy disk that comes with the touch screen. The name of the file is an 8-digit number that corresponds to the number on the sticker that is on the flat ribbon cable coming from the touch screen.

Most of the AMTT CSs do NOT have a floppy disk drive. The first few of them did however. Therefore, if the unit you are working on does not you will need to transfer the linearization file contained on the floppy disk to another media source like a USB pen drive.

If this is being setup at the Ryko factory, using the Test Procedure, start at step #11.

1. Connect a keyboard and mouse to the PS/2 connector located on the PC inside the AMTT CS. The connectors are labeled 'keyboard' and 'mouse'.

2. Touch the screen if the animation is playing. Enter **# 2 7 2 3 *** on the code entry screen. The User Login screen will appear and skip to **step 5**. If the animation does not stop when touching the screen you will need the keyboard in order to close the application. If this is the case then proceed to **step 3**.

3. If a keyboard and mouse were connected after power was applied to the PC then turn off the 5 AMP main breaker located on the base of the electrical panel and then turn it back on. It will take around a minute to start the AMTT CS software application. After the animation reappears go back to **step 2.** Otherwise, with the keyboard press the keys, '**Ctrl**', '**Alt**' and '**Del**' or '**Delete**' at the same time. This will display the Windows Security screen. Select the **Task Manager** button with the mouse.

4. From the Windows Task Manager screen select the Applications tab and make sure the AmttCS icon is highlighted. If not, select the icon with the mouse and press the **End Task** button. This will close the AMTT CS application. Skip to **step 11**.

5. Select the **ABC…** button next to **User:**. A software keyboard will appear. Enter the user name: ***PRO*** and select the **Accept** button. Next, select the **ABC…** button next to **Password:**. A software keyboard will appear. Enter the password: ***AMTTCS*** and select the **Accept** button. Keep in mind the user name and password are case sensitive. Press the **Login** button. The Main Menu will appear.

6. From the Main Menu, select the **System Setups** button. The System Setup Menu will appear.

7. If a keyboard and mouse were connected before power was applied to the PC you can skip to **step 9**. Otherwise, from the System Setups Menu, select the **Shutdown** button. This will power down the unit. You will be prompted when it is safe to turn off the AMTT CS.

8. Turn off the 5 AMP main breaker located on the base of the electrical panel and then turn it back on. It will take around a minute to start the AMTT CS software application. After the animation reappears go back to **step 2**.

9. From the System Setups Menu, select the **Exit To Boot App** button. This will close the AMTT CS application and the AMTT CS Boot Application will appear.

10. From the AMTT CS Boot Application, select the **Exit To OS** button. The Windows desktop will appear.

11. From the bottom left corner of the Windows desktop with the mouse, Select **Start->Programs->Touch->Configuration**. The Configuration Utilities window will appear. If you can't see the **Start** button, move the mouse to the bottom of the screen as far as it can go. The **taskbar** and **Star**t button should appear.

12. From the Configuration Utilities window with the mouse, select the **Interface** button. The Interface window will appear.

13. From the Interface window, make sure the checkboxes next to **Right Mouse button** and **Stream Mode** are NOT checked then select the **Sensitivity …** button. The Sensitivity configuration window will appear.

14. From the Sensitivity configuration window, make sure the sensitivity is set to "2". If it is not, then using the mouse select either the left or right arrow button set it to "2". Select the **OK** button. This will close the Sensitivity configuration window.

15. From the Interface window, select the **OK** button. This will close the Interface window.

16. From the Configuration Utilities window, select the **Exit** button.

17. From the bottom left corner of the Windows desktop with the mouse, Select **Start->Programs->Touch->NFI Setup Utility**. The NFI Setup Utility window will appear. If you can't see the **Start** button, move the mouse to the bottom of the screen as far as it can go. The **taskbar** and **Star**t button should appear.

18. From the NFI Setup Utility window, Select the **Start…** button. The Initialize window will appear. This will begin a 3-step process. The first of which is setting a baseline for the touch screen.

19. From the Initialize window, select the **Continue** button. The Baseline window will appear.

20. From the Baseline window, select the **Start** button. The Set Baseline window will appear and automatically set the baseline. Do NOT touch the screen while this process is happening. When it is finished the nfiutils window should appear stating, “Baseline operation successful”. Select the **OK** button. The Linearization Data Download window will appear.

    NOTE: If the nfiutils window appears stating, “Baseline operation timed out” then you should verify the serial interface to the touch screen is connected to CN3, which is COM port 1 and that the connection is not loose. If this happens, select the **OK** button. The Linearization Data Download window will appear. With the mouse select the “X” button at the top-right corner of the window. This will close the Linearization Data Download window and the NFI Setup Utility window will appear. Next, go back to **step 17** and continue.

21. If you are replacing the actual touch screen then you should have the floppy disk containing the linearization file. Otherwise, as stated at the beginning of this document the existing touch screen linearization file is located in the directory C:\Installs\Linearization\. If this is the case then move to **step 40**. In order to copy the linearization file from the floppy disk you will first need to find a PC or a laptop that has a floppy disk drive and a USB port if you are planning to use a USB pen drive to copy the file to.

22. Insert the floppy disk into the drive and connect the USB pen drive to a USB port on the PC or laptop. From the Windows desktop with a mouse double-click on the **My Computer** icon.

23. From the My Computer window, double-click on the **3 ½ Floppy (A:)** icon. The title bar on the window will change to 3 ½ Floppy (A:).

24. Using the mouse select (highlight) the 8-digit filename and from the pull-down menu select **Edit->Copy** or using the keyboard, (**Ctrl+C**).

25. From the **3 ½ Floppy** (A:) window, click on the **Back** button on the toolbar. The title bar on the window will change to **My Computer**.

26. Double-click on the **Removable Disk** icon. This should be what your USB pen drive should be called. If it is not, then select the appropriate icon.

27. From the Removable Disk window select **Edit->Paste** from the pull-down menu or using a keyboard, (**Ctrl+V**). The linearization file will be copied to this location.

28. If this is being setup other than at the Ryko factory then select **File->Close**.
    If this is being setup at the Ryko factory then the linearization file will also need to be stored on the Ryko network server. From the **Removable Disk** window, click on the Back button on the toolbar. The title bar on the window will change to **My Computer**. Double-click on the icons in this order **Sys on ‘Ryko’(F:, G:, or H:) => User => Touchscreen Linearization File**. From the Touchscreen Linearization File window select **Edit->Paste** from the pull-down menu. The linearization file will be copied to this location. When this completes, select **File->Close**.

29. Remove the floppy disk from the drive and place the disk with the manuals of the AMTT CS. Located on the toolbar, at the bottom of the Windows desktop in the right corner of the screen you will see an icon containing a “green left arrow” with a rectangle-shaped disk below it. Using the mouse, click on this icon (left-click) and select,
Stop USB Mass Storage Device – Drive. A pop-up window stating, “The ‘USB Mass Storage Device’ device can now be safely removed from the system”, select the **OK** button. Remove the USB pen drive from the USB port on the PC or laptop.

30. Connect the USB pen drive to the USB port located on the PC inside the AMTT CS.

31. From the Windows desktop on the AMTT CS using a mouse, double-click on the **My Computer** icon.
32. From the My Computer window, double-click on the **Removable Disk** icon. The title bar on the window will change to Removable Disk.

33. Select (highlight) the 8-digit filename and from the pull-down menu select **Edit->Copy** or using the keyboard, (**Ctrl+C**).

34. From the Removable Disk window, click on the **Back** button on the toolbar. The title bar on the window will change to My Computer.

35. Double-click on the **Local Disk (C:)** icon. The title bar on the window will change to Local Disk (C:).

36. Double-click on the folder (directory) **Installs**. The title bar on the window will change to Installs.

37. Double-click on the folder (directory) **Linearization**. The title bar on the window will change to Linearization.

38. From the Linearization window select **Edit->Paste** from the pull-down menu or using a keyboard, (**Ctrl+V**). The linearization file will be copied to this location (C:\Installs\Linearization). When this completes, select **File->Close**.

39. Located on the toolbar, at the bottom of the Windows desktop in the right corner of the screen you will see an icon containing a “green left arrow” with a rectangle-shaped disk below it. Using the mouse, click on this icon (left-click) and select, **Stop USB Mass Storage Device – Drive**. A pop-up window stating, “The ‘USB Mass Storage Device’ device can now be safely removed from the system”, select the **OK** button. Remove the USB pen drive from the USB port on the PC inside the AMTT CS.

40. From the Linearization Data Download window on the AMTT CS, select the **Browse** button. The Open window will appear.

41. From the Open window, select the down arrow in the drop-down menu **Look in:**. Navigate to the following directory:

    C:\Installs\Linearization

    This is where the linearization file is stored. When you locate it, click on the 8-digit filename and select the **Open** button. The Open window will close and the Linearization Data Download window will once again appear with the path to the location of the linearization file contained in the box next the Browse button.

42. From the Linearization Data Download window, select the **Start** button. The Linearization progress window will appear showing the progress. When this completes, The nfiutils window should appear stating, “Linearization operation successful”. Select the **OK** button. The nfiutils window and the Linearization progress window will close. The Touchscreen Alignment window will appear.

43. From the Touchscreen Alignment window, select the **Start** button and follow the directions on the screen. When this process successfully completes the Check Alignment window should appear asking you to select the OK button within 10 seconds otherwise the original settings will be restored. After this is completed, the NFI Setup Utility window will appear.

44. From the NFI Setup Utility, select the **Exit** button. The touch screen initialization and setup process is now completed.

Parts Listing Table Of Contents For Work Order 7960050

Part No.	Description	Page
99112010	COIN BOX/AMTT CS	P-1
25489-000	KEYED ALIKE OPT/AMTT,DIFFERENT	P-2
25491-000	KEYED ALIKE OPT/CHG,DIFFERENT	P-3
26131-000	COIN BOX ASSY/AMTT CS,TALL	P-4
26131-003	BILL ACCEPTOR OPT/AMTT CS	P-5
26131-005	COIN MECH OPT/AMTT CS,QUARTER	P-6
26131-008	COIN HOPPER OPTION	P-7
26131-010	COIN CUP-CHUTE OPTION	P-8
26131-013	CARD MECH OPT/AMTT CS,PAN	P-9
26131-015	PRINTER OPTION/AMTT CS	P-10
26188-000	KEYED ALIKE OPT/BA,KEY DIFF	P-11
26190-003	LABEL/CS,PR,PAN,$1&5&10,CH,Q	P-12
25490-000	KEYED ALIKE ASSY/AMTT,KEY DIFF	P-13
25492-000	KEYED ALIKE ASSY/CHG,KEY DIFF	P-15
26053-000	COIN BOX ASSY/AMTT CS,TALL	P-17
25924-000	BILL ACCEPTOR OPT/AMTT CS	P-18
25925-000	COIN MECH OPT/AMTT CS,QUARTER	P-20
25926-000	COIN HOPPER OPTION	P-22
25927-001	COIN CUP-CHUTE OPT	P-25
25929-003	CARD MECH OPT/AMTT CS,PAN	P-27
25930-000	PRINTER OPTION/AMTT CS	P-29
26187-000	KEYED ALIKE ASSY/BA,KEY DIFF	P-31
25905-000	HEAD ASSY/PEDESTAL,AMTT CS	P-33
22508-005	PEDESTAL ASSY/SS,AMTT CB,TALL	P-38
25914-002	CABLE ASSY/BILL ACC,MARS	P-41
25914-000	CABLE ASSY/COIN SWITCH	P-43
22182-001	HOPPER/MOD,LOCKABLE,LG COIN	P-45
25912-001	CHANGER CHUTE ASSY	P-47
25907-000	PRINTER ASSEMBLY	P-49
25913-000	DOOR ASSY/AMTT CS	P-51
25910-000	PANEL ASSY/AMTT CS	P-54
22477-001	DOOR SWITCH ASSY/AMTT CS	P-65
24421-000	LABEL/"NO CASH"	P-67
23152-002	BOX ASSY/SENSOR HOUSING,PED	P-69
25914-003	CABLE ASSY/PRINTER POWER	P-71
25919-004	DISPLAY ASSY/12.1" W/HEATERS	P-73
25914-011	CABLE ASSY/BACKLIGHT INVERTER	P-80
25909-002	PC CHASSIS ASSY/AMTT CS,1.2	P-82
15477-009	COIN BOX INTFC ASSY/AMTT CS	P-87
25602-001	MDB CABLE HARNESS/AMTT CS	P-90
26050-002	CABLE ASSY/CONN BRKT,PRINTER	P-92
26050-000	CABLE ASSY/CONN BRKT,DSPL&SPKR	P-94
26050-003	CABLE ASSY/CONN BRKT,BACKLIGHT	P-96

Parts Listing Table Of Contents For Work Order 7960050 - Continued

Part No.	Description	Page
26050-001	CABLE ASSY/CONN BRKT,CARD MECH	P-98
26050-006	CABLE ASSY/ATX TO COMMON	P-100
24517-001	PATCH CORD/STEREO,3.5MM,3.5MM	P-102
26405-000	MOUNT/ENVIRONMENT SENSOR	P-104
27734-000	LCD SCREEN ASSY/HEATED,12.1"	P-106
25914-016	CABLE ASSY/DOOR POWER	P-108
24993-013	PC CARD/DIG I/O,ATOD,PCI,MOD	P-110
26050-005	CABLE ASSY/ATX EXTENSION,10"	P-112
14978-003	PCB ASSY/DIODE POWER SUPPLY	P-114

Parts Listing for Work Order 7960050 **P-1**

COIN BOX/AMTT CS

PART NO. 99112010 REVISION -

NO DRAWING

ITEM	QTY.	UOM	PART NO.	DESCRIPTION
1	1	EA	25489-000	KEYED ALIKE OPT/AMTT,DIFFERENT
1	1	EA	25491-000	KEYED ALIKE OPT/CHG,DIFFERENT
1	1	EA	26131-000	COIN BOX ASSY/AMTT CS,TALL
1	1	EA	26131-003	BILL ACCEPTOR OPT/AMTT CS
1	1	EA	26131-005	COIN MECH OPT/AMTT CS,QUARTER
1	1	EA	26131-008	COIN HOPPER OPTION
1	1	EA	26131-010	COIN CUP-CHUTE OPTION
1	1	EA	26131-013	CARD MECH OPT/AMTT CS,PAN
1	1	EA	26131-015	PRINTER OPTION/AMTT CS
1	1	EA	26188-000	KEYED ALIKE OPT/BA,KEY DIFF
1	1	EA	26190-003	LABEL/CS,PR,PAN,$1&5&10,CH,Q

Parts Listing for Work Order 7960050 **P-2**

KEYED ALIKE OPT/AMTT,DIFFERENT

PART NO. 25489-000 REVISION - **NO DRAWING**

ITEM	QTY.	UOM	PART NO.	DESCRIPTION
1	1	EA	25490-000	KEYED ALIKE ASSY/AMTT,KEY DIFF

Parts Listing for Work Order 7960050 **P-3**

KEYED ALIKE OPT/CHG,DIFFERENT

PART NO. 25491-000 REVISION - **NO DRAWING**

ITEM	QTY.	UOM	PART NO.	DESCRIPTION
1	1	EA	25492-000	KEYED ALIKE ASSY/CHG,KEY DIFF

Parts Listing for Work Order 7960050 **P-4**

COIN BOX ASSY/AMTT CS,TALL

PART NO. 26131-000 REVISION - **NO DRAWING**

ITEM	QTY.	UOM	PART NO.	DESCRIPTION
1	1	EA	26053-000	COIN BOX ASSY/AMTT CS,TALL

Parts Listing for Work Order 7960050 **P-5**

BILL ACCEPTOR OPT/AMTT CS

PART NO. 26131-003 REVISION -

NO DRAWING

ITEM	QTY.	UOM	PART NO.	DESCRIPTION
1	1	EA	25924-000	BILL ACCEPTOR OPT/AMTT CS

Parts Listing for Work Order 7960050 **P-6**

COIN MECH OPT/AMTT CS,QUARTER

PART NO. 26131-005 REVISION - **NO DRAWING**

ITEM	QTY.	UOM	PART NO.	DESCRIPTION
1	1	EA	25925-000	COIN MECH OPT/AMTT CS,QUARTER

Parts Listing for Work Order 7960050 **P-7**

COIN HOPPER OPTION

PART NO. 26131-008 REVISION -

NO DRAWING

ITEM	QTY.	UOM	PART NO.	DESCRIPTION
1	1	EA	25926-000	COIN HOPPER OPTION

Parts Listing for Work Order 7960050 **P-8**

COIN CUP-CHUTE OPTION

PART NO. 26131-010 REVISION A

NO DRAWING

ITEM	QTY.	UOM	PART NO.	DESCRIPTION
1	1	EA	25927-001	COIN CUP-CHUTE OPT

Parts Listing for Work Order 7960050 **P-9**

CARD MECH OPT/AMTT CS,PAN

PART NO. 26131-013 REVISION - **NO DRAWING**

ITEM	QTY.	UOM	PART NO.	DESCRIPTION
1	1	EA	25929-003	CARD MECH OPT/AMTT CS,PAN

Parts Listing for Work Order 7960050 **P-10**

PRINTER OPTION/AMTT CS

PART NO. 26131-015 REVISION -

NO DRAWING

ITEM	QTY.	UOM	PART NO.	DESCRIPTION
1	1	EA	25930-000	PRINTER OPTION/AMTT CS

Parts Listing for Work Order 7960050 **P-11**

KEYED ALIKE OPT/BA,KEY DIFF

PART NO. 26188-000 REVISION - **NO DRAWING**

ITEM	QTY.	UOM	PART NO.	DESCRIPTION
1	1	EA	26187-000	KEYED ALIKE ASSY/BA,KEY DIFF

Parts Listing for Work Order 7960050 **P-12**

LABEL/CS,PR,PAN,$1&5&10,CH,Q

PART NO. 26190-003 REVISION -

NO DRAWING

ITEM	QTY.	UOM	PART NO.	DESCRIPTION
1	1	EA	25888-003	LABEL/CS,PR,PAN,$1&5&10,CH,Q

KEYED ALIKE ASSY/AMTT,KEY DIFF

PART NO. 25490-000 REVISION -

ITEM	QTY.	UOM	PART NO.	DESCRIPTION
1	1	PR	12930-003	LOCK/PLUG,1-1/8-12THD,PR,W/KEY
2	1	EA	13623-003	BAG/PLASTIC,LOCKING,3"x4"

NOTES:

1. INSTALL LOCK ASSEMBLIES (ITEM #1) AT BOTH LOCATIONS, MAKING SURE THEY ARE SEATED PROPERLY IN THE RECESS BEFORE TIGHTENING LOCK NUT.

2. PLACE KEY FROM LOCK INTO PLASTIC BAG (ITEM #2) AND TAPE TO HEAD ASSEMBLY, PREFERABLY ON PROTECTIVE PLASTIC COATING OF THE HOOD WELDMENT.

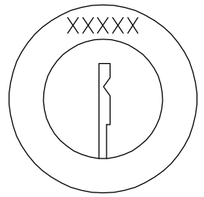

DETAIL B
(ENLARGED FOR CLARITY)

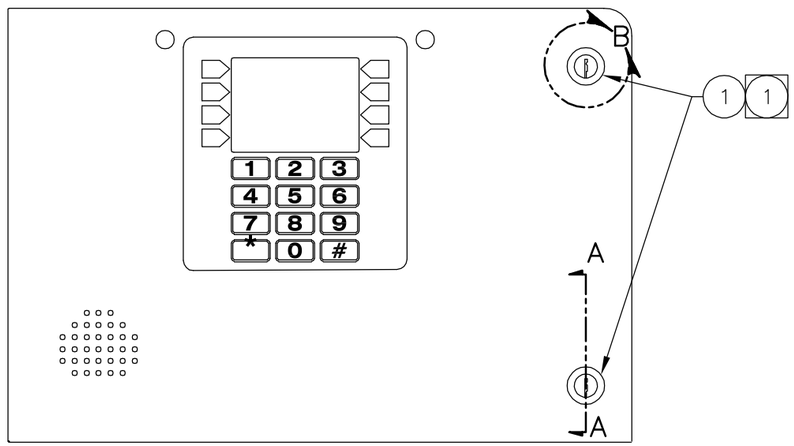

FRONT VIEW OF COIN BOX DOOR ASSEMBLY
(VARIOUS COMPONENTS NOT SHOWN FOR CLARITY)

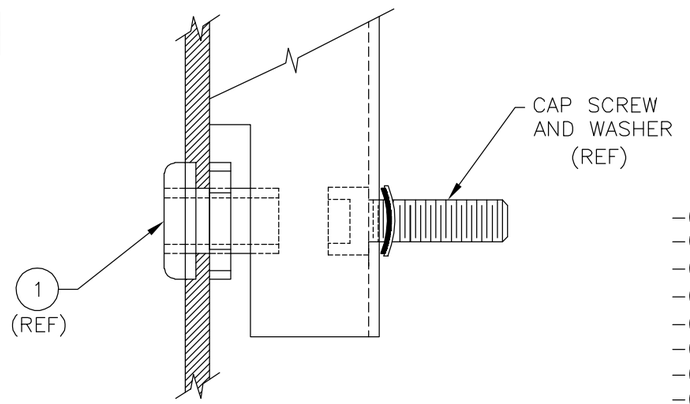

SECTION A–A
(ENLARGED FOR CLARITY)

–015	KEYED ALIKE ASSY/AMTT,KEY #15
–014	KEYED ALIKE ASSY/AMTT,KEY #14
–013	KEYED ALIKE ASSY/AMTT,KEY #13
–012	KEYED ALIKE ASSY/AMTT,KEY #12
–011	KEYED ALIKE ASSY/AMTT,KEY #11
–010	KEYED ALIKE ASSY/AMTT,KEY #10
–009	KEYED ALIKE ASSY/AMTT,KEY #9
–008	KEYED ALIKE ASSY/AMTT,KEY #8
–007	KEYED ALIKE ASSY/AMTT,KEY #7
–006	KEYED ALIKE ASSY/AMTT,KEY #6
–005	KEYED ALIKE ASSY/AMTT,KEY #5
–004	KEYED ALIKE ASSY/AMTT,KEY #4
–003	KEYED ALIKE ASSY/AMTT,KEY #3
–002	KEYED ALIKE ASSY/AMTT,KEY #2
–001	KEYED ALIKE ASSY/AMTT,KEY #1
–000	KEYED ALIKE ASSY/AMTT,KEY,DIFF

LTR	ECO	DESCRIPTION	BY	DATE	APVD
–	0103–103	RELEASING DRAWING	KC	3/3/03	RB

FORM #19477–037 REV B 01/20/97

PRODUCT: AMTT

TOLERANCES UNLESS OTHERWISE SPECIFIED

1. ALL SPECIFICATIONS SUBJECT TO CHANGE WITHOUT NOTICE.
2. UNLESS OTHERWISE SPECIFIED, ALL DIMENSIONS ARE IN INCHES.

MATERIAL: SEE PRODUCT STRUCTURE

SCALE: NONE | DATE: 2/12/03
DRAWN: K. COOP | CHK'D: DC/JL
APVD: RB | DATE: 3/3/03

RYKO® MFG. CO. U.S.A.
GRIMES,IOWA 50111

KEYED ALIKE ASSY/ AMTT,KEY

REV. –
DWG. NO. 25490–000

KEYED ALIKE ASSY/CHG,KEY DIFF

PART NO. 25492-000 REVISION -

ITEM	QTY.	UOM	PART NO.	DESCRIPTION
1	1	EA	11119-202	PADLOCK/KEYED DIFF,15/16"SHKL
2	1	EA	10005-201	WIRE TIE/4",5/8"MAX DIA

NOTES:

1. INSERT PADLOCK (ITEM #1) THROUGH THE SLOTTED HOLE IN THE CHANGE HOPPER TOP AND THROUGH HOLE IN CHANGE HOPPER.
2. BEFORE SHIPPING REMOVE KEYS FROM PADLOCK AND TIE THEM TO THE PADLOCK WITH WIRE TIE (ITEM #2).

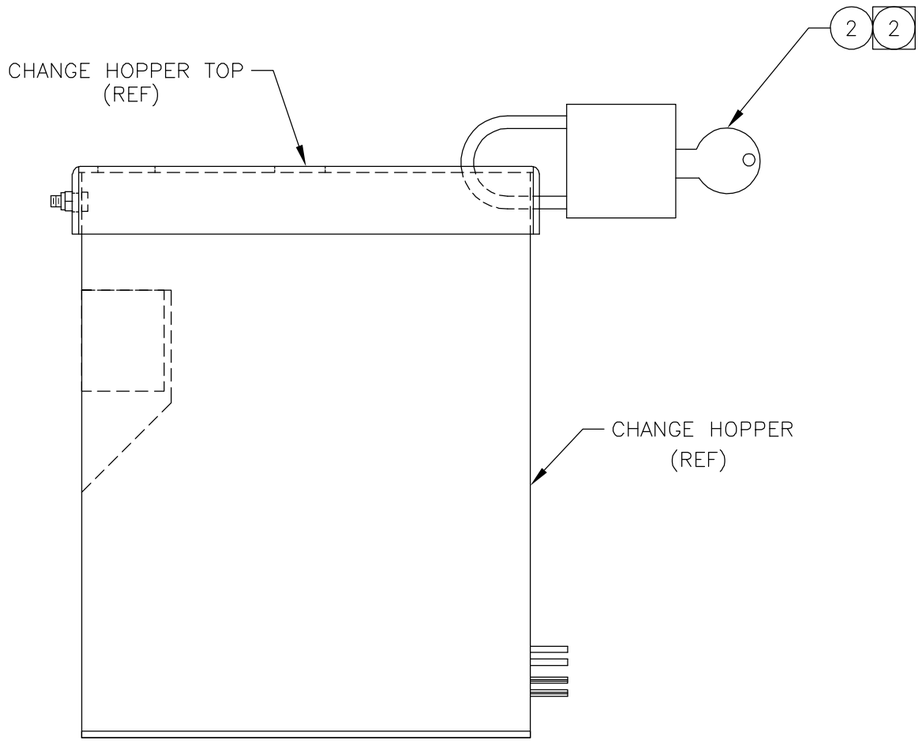

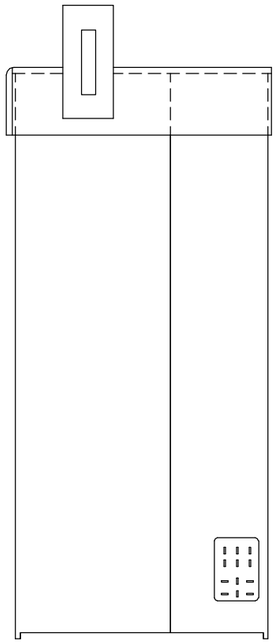

-015 KEYED ALIKE ASSY/CHG,KEY #15
-014 KEYED ALIKE ASSY/CHG,KEY #14
-013 KEYED ALIKE ASSY/CHG,KEY #13
-012 KEYED ALIKE ASSY/CHG,KEY #12
-011 KEYED ALIKE ASSY/CHG,KEY #11
-010 KEYED ALIKE ASSY/CHG,KEY #10
-009 KEYED ALIKE ASSY/CHG,KEY #9
-008 KEYED ALIKE ASSY/CHG,KEY #8
-007 KEYED ALIKE ASSY/CHG,KEY #7
-006 KEYED ALIKE ASSY/CHG,KEY #6
-005 KEYED ALIKE ASSY/CHG,KEY #5
-004 KEYED ALIKE ASSY/CHG,KEY #4
-003 KEYED ALIKE ASSY/CHG,KEY #3
-002 KEYED ALIKE ASSY/CHG,KEY #2
-001 KEYED ALIKE ASSY/CHG,KEY #1
-000 KEYED ALIKE ASSY/CHG,KEY DIFF

LTR	ECO	RELEASING DRAWING DESCRIPTION	BY	DATE	APVD
–	0103-103		KC	3/3/03	RB

FORM #19477-037 REV B 01/20/97

PRODUCT
AMTT

TOLERANCES
UNLESS OTHERWISE SPECIFIED

MATERIAL
SEE PRODUCT STRUCTURE

SCALE NONE | DATE 2/12/03
DRAWN K. COOP | CHK'D DC/JL
APVD | DATE 3/3/03
RB

1. ALL SPECIFICATIONS SUBJECT TO CHANGE WITHOUT NOTICE.
2. UNLESS OTHERWISE SPECIFIED, ALL DIMENSIONS ARE IN INCHES.

RYKO® MFG. CO.
GRIMES,IOWA 50111 U.S.A.

KEYED ALIKE ASSY/ CHG,KEY

REV. –
DWG. NO. 25492-000

Parts Listing for Work Order 7960050 **P-17**

COIN BOX ASSY/AMTT CS,TALL

PART NO. 26053-000 REVISION C

NO DRAWING

ITEM	QTY.	UOM	PART NO.	DESCRIPTION
1	1	EA	25905-000	HEAD ASSY/PEDESTAL,AMTT CS
2	1	EA	22508-005	PEDESTAL ASSY/SS,AMTT CB,TALL
5	1	EA	12060-098	SHIPPING CARTON/AMTT,HEAD
7	1	BD	15599-000	POLYPROPYLENE CUSHION MATERIAL
8	1	EA	20828-001	PALLET ASSEMBLY/AMTT
100	1	EA	01251-000	TEST PROC/AMTT CS,COIN BOX

BILL ACCEPTOR OPT/AMTT CS

PART NO. 25924-000 REVISION A

ITEM	QTY.	UOM	PART NO.	DESCRIPTION
1	1	EA	25036-000	BILL ACCEPTOR/$1,2,5,10,20,24V
2	4	EA	10034-269	SCREW/MACH,#8-32X1-3/4,PH,SS
3	4	EA	10428-210	WASHER/FLAT,#8 SAE,SS
4	1	EA	25914-002	CABLE ASSY/BILL ACC,MARS

DWG. NO. 25924–000

NOTES:

1. MOUNT BILL ACCEPTOR (ITEM #1) TO COIN BOX DOOR USING SCREWS AND WASHERS (ITEMS #2 AND #3).
2. PLUG CABLE ASSEMBLY (ITEM #4) INTO BILL ACCEPTOR (ITEM #1) MAKING SURE THE CONNECTOR'S PLUGS LINE UP WITH THE MISSING PINS IN THE BILL ACCEPTOR'S CONNECTOR. ROUTE CABLE WITH OTHER CABLES ON THE DOOR ASSEMBLY. REFER TO THE HEAD ASSEMBLY FOR CABLE TERMINATION.
3. PLACE ANY MANUFACTURE SUPPLIED BILL ACCEPTOR MANUALS WITH RYKO SUPPLIED MANUALS.

A

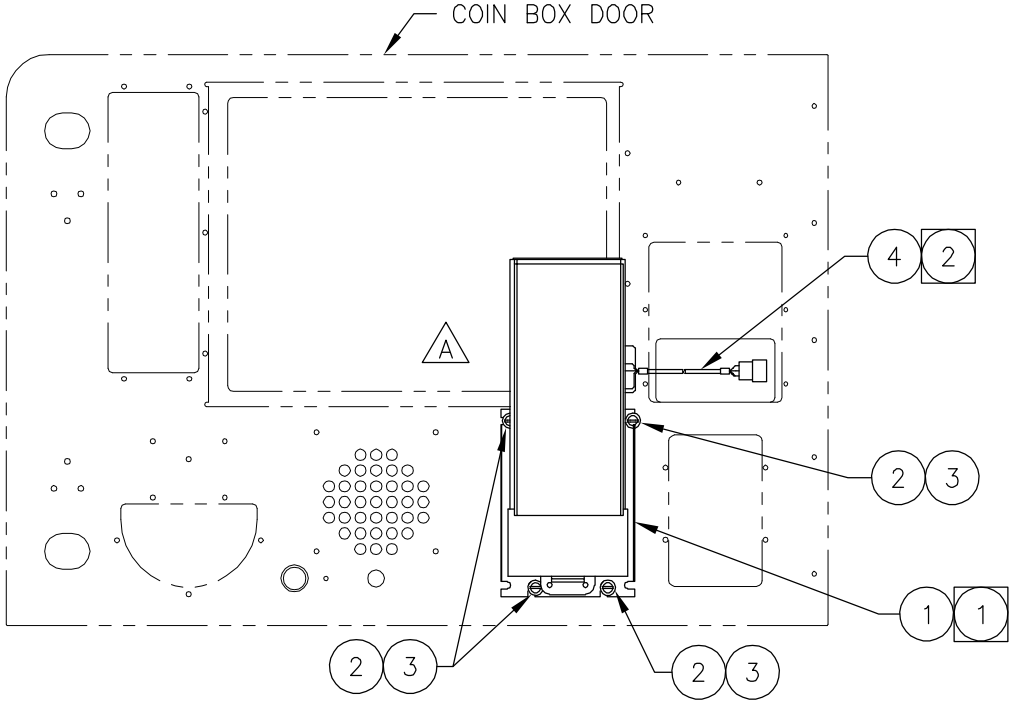

A

BACK VIEW OF COIN BOX DOOR

LTR	ECO	DESCRIPTION	BY	DATE	APVD
A	0908–061	DEL NOTE 4,VIEW A–A	KS	9/12/08	RB
–	0104–007	RELEASING DRAWING	MS	1/16/04	RB

PRODUCT: AMTT CS

TOLERANCES UNLESS OTHERWISE SPECIFIED

1. ALL SPECIFICATIONS SUBJECT TO CHANGE WITHOUT NOTICE.
2. UNLESS OTHERWISE SPECIFIED, ALL DIMENSIONS ARE IN INCHES.

MATERIAL: SEE PRODUCT STRUCTURE

SCALE: NONE | DATE: 1/5/03

DRAWN: M SMITH | CHK'D: WA/MB

APVD: RB | DATE: 1/16/04

RYKO® MFG. CO.
GRIMES,IOWA 50111 U.S.A.

BILL ACCEPTOR OPT/ AMTT CS

DWG. NO. 25924–000 | REV. A

FORM #19477–036 REV A 01/18/96

COIN MECH OPT/AMTT CS,QUARTER

PART NO. 25925-000 REVISION B

ITEM	QTY.	UOM	PART NO.	DESCRIPTION
1	1	EA	12137-204	COIN MECH/$.25,24V SOL
2	1	EA	25914-000	CABLE ASSY/COIN SWITCH
3	1	EA	25878-005	PLATE/COIN MECH,OVAL
4	8	EA	10034-278	SCREW/MACH,#8-32X3/8,SLHWH,SS
5	1	EA	12137-800	BLOCKING COIL/24VDC
6	2	EA	11488-203	CLAMP/CABLE,1/4"DIA,BLK NYLON
7	1	EA	15481-002	NUT/NYLON HEX,#6-32

DWG. NO. 25925–000

NOTES:

1. REMOVE EXISTING 24 VOLT AC BLOCKING COIL FROM THE COIN MECH (ITEM #1). REPLACE WITH 24 VOLT DC BLOCKING COIL (ITEM #5). RESTOCK 24 VAC BLOCKING COIL UNDER PART NUMBER 12137–252.

2. CONNECT TERMINALS FROM CABLE ASSEMBLY AS SHOWN. ROUTE CABLE ASSEMBLY WITH OTHER CABLES ON THE DOOR ASSEMBLY. USING CABLE CLAMP (ITEM #6) SECURE THE CABLE TO THE STUDS ON THE TOP LEFT CORNER OF THE DISPLAY AND THE BOTTOM LEFT CORNER OF THE DISPLAY ASSEMBLY. REFER TO THE HEAD ASSEMBLY FOR CABLE TERMINATIONS.

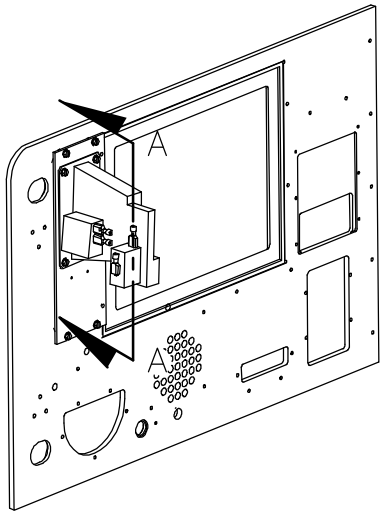

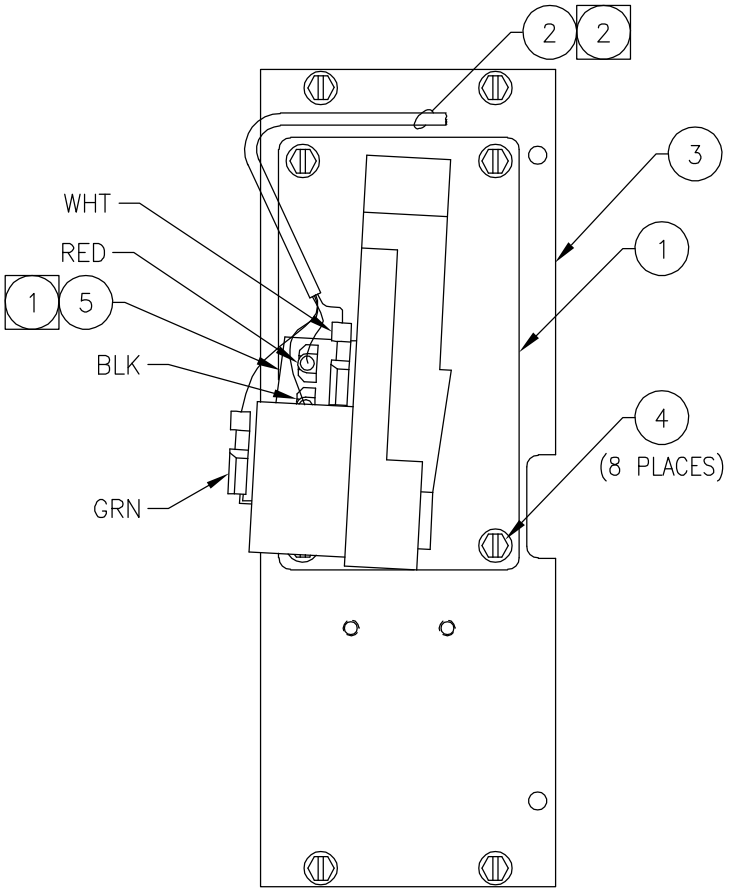

VIEW A–A
(ENLARGED FOR CLARITY)

LTR	ECO	DESCRIPTION	BY	DATE	APVD
B	0105–008	REPLACED SCREWS	MB	1/24/05	RB
A	0504–031	REV NOTE 2	AM	5/10/04	RB
–	1203–023	RELEASING DRAWING	LE	1/13/04	RB

PRODUCT: AMTT CS

TOLERANCES UNLESS OTHERWISE SPECIFIED

1. ALL SPECIFICATIONS SUBJECT TO CHANGE WITHOUT NOTICE.
2. UNLESS OTHERWISE SPECIFIED, ALL DIMENSIONS ARE IN INCHES.

MATERIAL: SEE PRODUCT STRUCTURE

SCALE: NONE | DATE: 01/05/04
DRAWN: LE | CHK'D: MB/AM
APVD: RB | DATE: 1/13/04

RYKO® MFG. CO.
GRIMES,IOWA 50111 U.S.A.

COIN MECH OPT/
AMTT CS,QUARTER

DWG. NO. 25925–000 | REV. B

FORM #19477–036 REV A 01/18/96

COIN HOPPER OPTION

PART NO. 25926-000 REVISION C

ITEM	QTY.	UOM	PART NO.	DESCRIPTION
1	1	EA	22182-001	HOPPER/MOD,LOCKABLE,LG COIN
2	6	EA	10034-225	SCREW/MACH,#10-24x3/4,FH,SS
3	17	FT	17276-004	WIRE/STRD,INTL,0.75SQMM DK BLU
4	0	FT	20059-000	TUBING/HEAT SHRINK,1/2",W/ADH
5	1	EA	22442-000	CHANGE CUP/ROUND,PROTRUDING
6	1	EA	22442-001	DOOR/CHANGE CUP,ROUND
7	2	EA	10186-201	PIN/COTTER,1/16x3/4,SS
8	3	EA	10034-277	SCREW/MACH,#8-32X1/4,SLHWH,SS
10	1	EA	22505-000	CHANGER TOP/LOCK
11	1	EA	10877-228	SCREW/HHC,5/16-18x1/2,SS
12	1	EA	10878-206	NUT/ 5/16-18,NYL INS,ZN PL

NOTES:

1. CONNECTOR SHOWN IN VIEW A–A IS ON BACK OF HOPPER BASE PLATE (ITEM #1). SOLDER WIRES TO HOPPER BASE PLATE AS SHOWN IN WIRE CHART BELOW. CONNECT OTHER END TO PC INTERFACE ON THE PANEL ASSEMBLY. ADJUST WIRE LENGTHS SLIGHTLY SO THAT A NEAT BUNDLE OF WIRES CAN BE PRODUCED.

HOPPER BASE	1	2	3	4	5	6	7	8	9	10	11	12
CONNECT TO	A2-TB3-8		A2-TB3-4	A2-TB3-3	A2-TB3-5		A2-TB3-6	A2-TB3-2	A2-TB3-7		N/A	A2-TB3-1
JUMPER TO	PINS 2&6	PIN 1				PIN 1			PIN 10	PIN 9		

2. SLIDE FOUR (4) 1/2" PIECES OF HEAT SHRINK TUBING (ITEM #4) OVER THE WIRES (ITEM #3) EVENLY SPACED.

3. SLIDE HOPPER ONTO THE HOPPER BASE, BEING SURE THAT THE HOPPER PLUGS IN PROPERLY INTO THE HOPPER CONNECTOR.

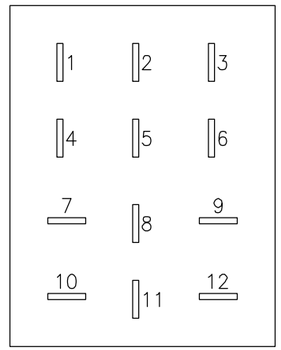

VIEW A–A (1)
(HOPPER BASE CONNECTOR)
(ROTATED 180°)

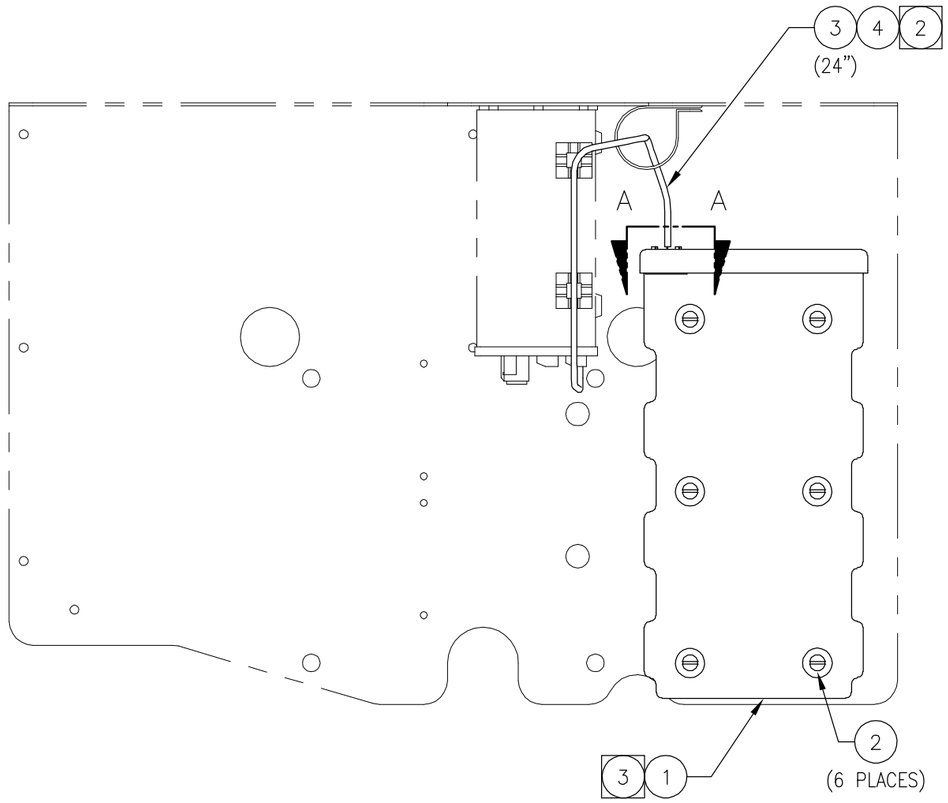

TOP VIEW OF PANEL ASSEMBLY
(SOME ITEMS REMOVED FOR CLARITY)

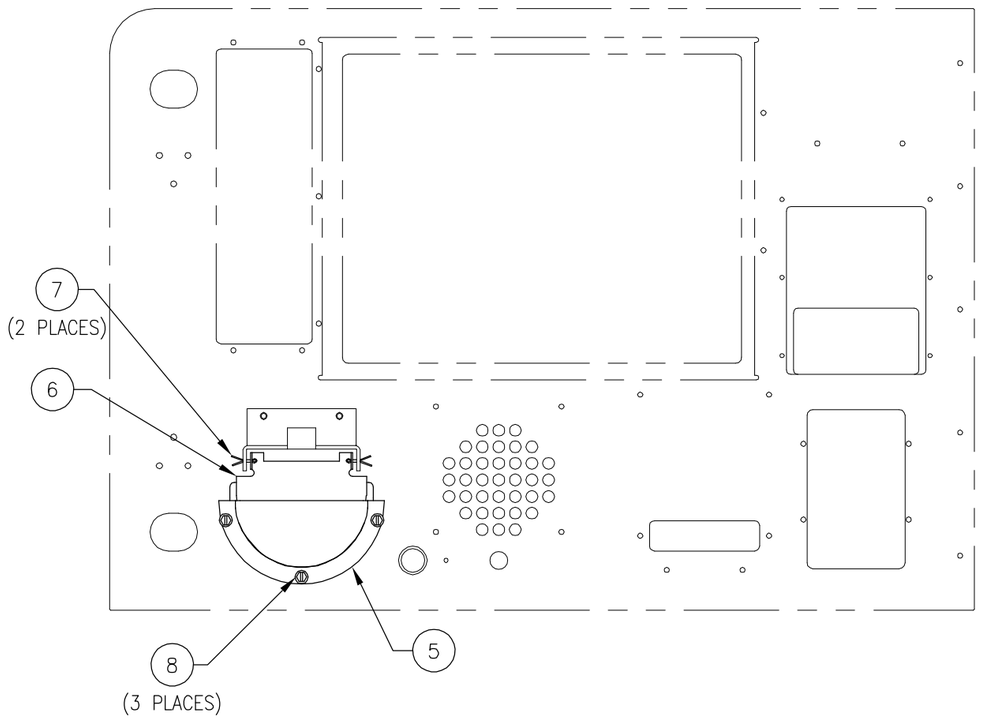

BACK VIEW OF COIN BOX DOOR

LTR	DESCRIPTION	DATE	APVD
C	0105-008 REPLACED SCREWS	1/24/05	RB
B	1104-061 ADDED ITEMS 10,11&12	11/12/04	RB
A	0804-016 REPLACED SCREW ITEM #2	8/4/04	RB
–	0104-007 RELEASING DRAWING	1/16/04	RB
	ECO	BY	

FORM #19477-037 REV B 01/20/97

PRODUCT: AMTT CS

TOLERANCES UNLESS OTHERWISE SPECIFIED

MATERIAL: SEE PRODUCT STRUCTURE
SCALE: NONE
DRAWN: M SMITH
DATE: 1/7/04
CHK'D: WA/MB
APVD
DATE: 1/16/04
RB

1. ALL SPECIFICATIONS SUBJECT TO CHANGE WITHOUT NOTICE.
2. UNLESS OTHERWISE SPECIFIED, ALL DIMENSIONS ARE IN INCHES.

RYKO® MFG. CO. U.S.A.
GRIMES,IOWA 50111

COIN HOPPER OPTION

REV. C
DWG. NO. 25926-000

SHEET 1 OF 2

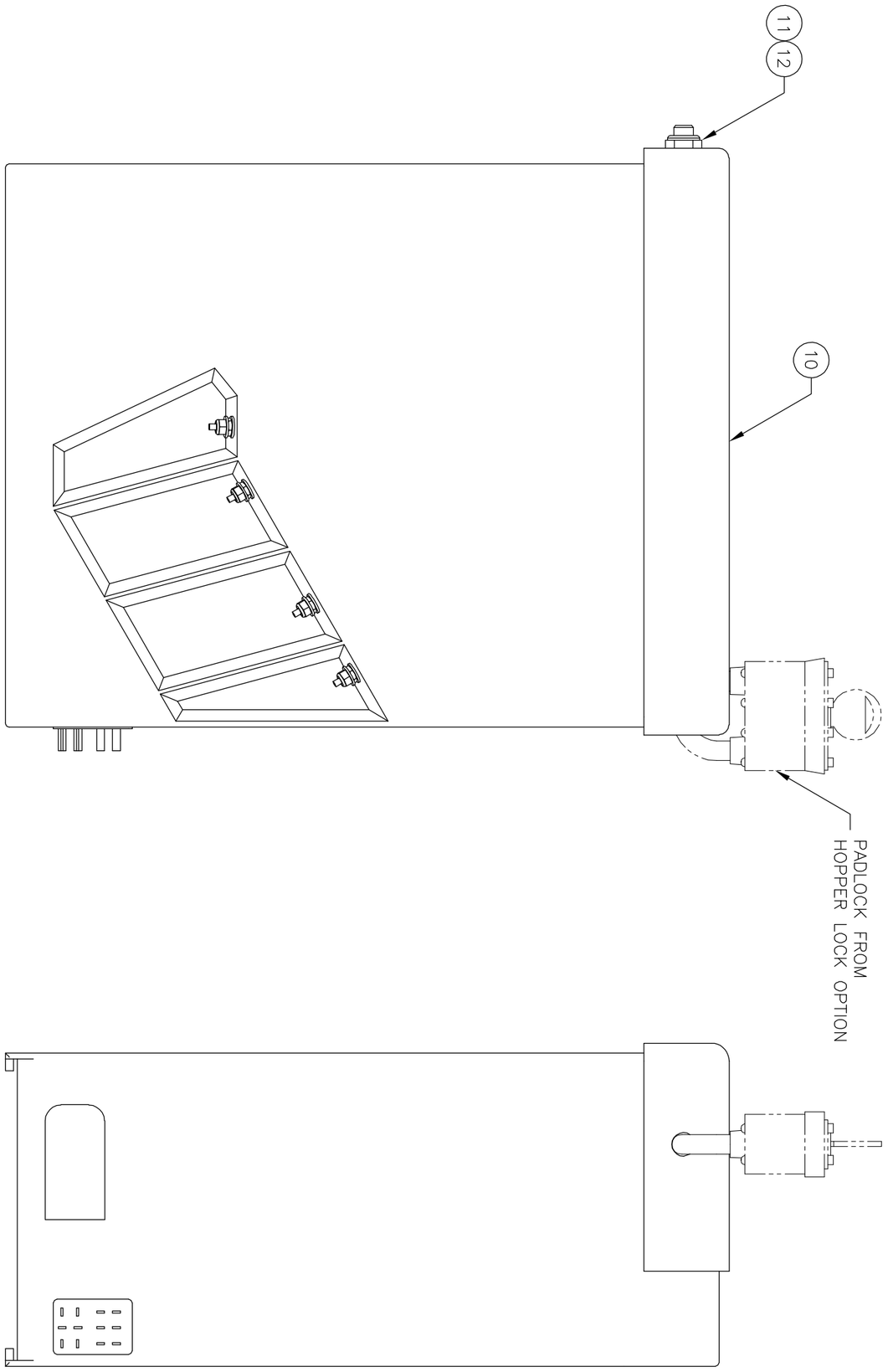

SHEET 2 OF 2

RYKO® MFG. CO.
GRIMES,IOWA 50111 U.S.A.

COIN HOPPER OPTION

MATERIAL	TOLERANCES UNLESS OTHERWISE SPECIFIED
SEE PRODUCT STRUCTURE	
SCALE NONE / DATE 1/7/04	
DRAWN M SMITH / CHK'D WA/MB	
APVD RB / DATE 1/16/04	1. ALL SPECIFICATIONS SUBJECT TO CHANGE WITHOUT NOTICE. 2. UNLESS OTHERWISE SPECIFIED, ALL DIMENSIONS ARE IN INCHES.

REV. C | DWG. NO. 25926-000

PRODUCT: AMTT CS

LTR	ECO	DESCRIPTION	BY	DATE	APVD
C	0105-008	REPLACED SCREWS	MB	1/24/05	RB
B	1104-061	ADDED ITEMS 10,11&12	MB	11/12/04	RB
A	0804-016	REPLACED SCREW ITEM #2	MB	8/4/04	RB
–	0104-007	RELEASING DRAWING	MS	1/16/04	RB

COIN CUP-CHUTE OPT

PART NO. 25927-001 REVISION -

ITEM	QTY.	UOM	PART NO.	DESCRIPTION
1	1	EA	25912-001	CHANGER CHUTE ASSY
2	1	EA	22484-001	BRACKET/CHANGE CHUTE MOUNT,CS
3	1	EA	22362-003	CHANGER CHUTE/CLIP
4	5	EA	10034-277	SCREW/MACH,#8-32X1/4,SLHWH,SS
5	2	EA	10428-210	WASHER/FLAT,#8 SAE,SS
6	1	EA	10034-232	SCREW/MACH,#8-32x1/2,SLHWH,SS
7	1	EA	13945-003	NUT/ #8-32,NYL INS,SS
8	1	EA	23188-000	WASHER/CHANGER CHUTE CLIP

NOTES:

1. CLIP CHANGER CHUTE ASSEMBLY (ITEM #1) IN BRACKETS (ITEMS #2 AND #3) AFTER ITEM #2 THROUGH #8 ARE INSTALLED.
2. BRACKETS (ITEMS #2 AND #3) CAN BE BENT BY HAND IF REQUIRED TO ALLOW THE CLIPS TO HOLD THE CHANGER CHUTE ASSEMBLY PROPERLY.

DWG. NO. 25927-001

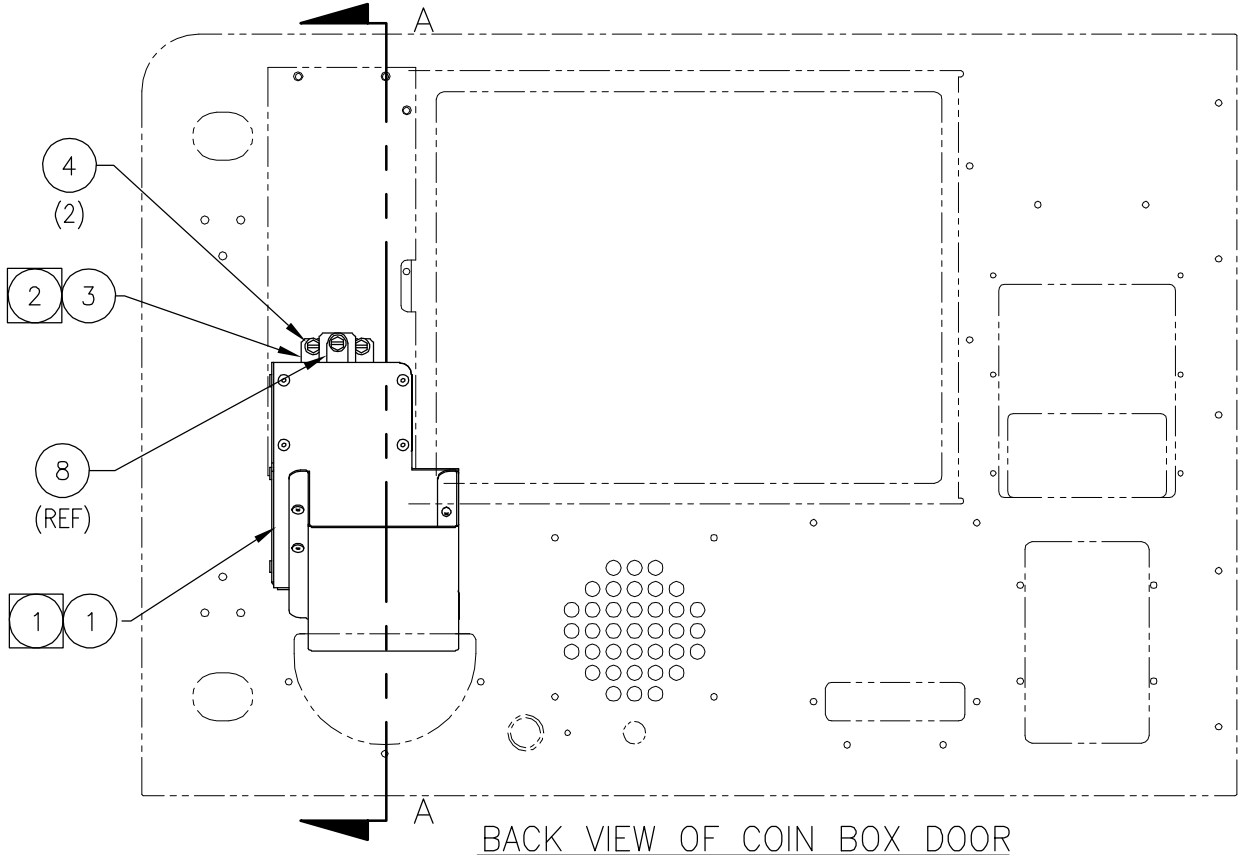

BACK VIEW OF COIN BOX DOOR

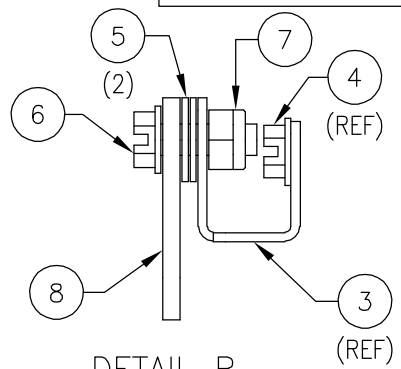

DETAIL B
(ENLARGED FOR CLARITY)

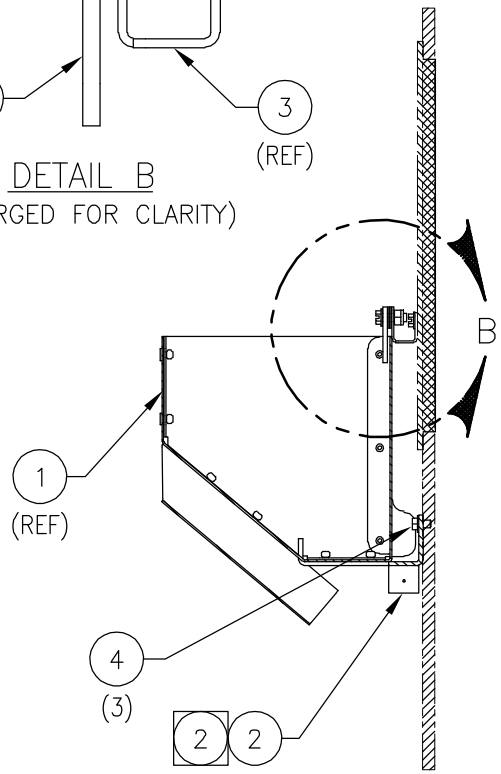

SECTION A–A

						PRODUCT	TOLERANCES UNLESS OTHERWISE SPECIFIED	MATERIAL SEE PRODUCT STRUCTURE
						AMTT CS		
								SCALE NONE / DATE 8/24/05
								DRAWN BEERENDS / CHK'D TB/MB
–	0805-063	RELEASING DRAWING	MB	8/30/05	RB		1. ALL SPECIFICATIONS SUBJECT TO CHANGE WITHOUT NOTICE. 2. UNLESS OTHERWISE SPECIFIED, ALL DIMENSIONS ARE IN INCHES.	APVD RB / DATE 8/30/05
LTR	ECO	DESCRIPTION	BY	DATE	APVD			

RYKO® MFG. CO.
GRIMES,IOWA 50111 U.S.A.

COIN CUP-CHUTE OPT

DWG. NO. 25927-001 REV. –

FORM #19477-036 REV A 01/18/96

CARD MECH OPT/AMTT CS,PAN

PART NO. 25929-003 REVISION A

ITEM	QTY.	UOM	PART NO.	DESCRIPTION
1	1	EA	25878-007	PLATE/CARD READER,PAN
2	2	EA	25898-001	MOUNT PLATE/CARD READER,PAN
3	1	EA	21663-012	READER MECH/MAGNETIC,PAN
4	4	EA	10034-278	SCREW/MACH,#8-32X3/8,SLHWH,SS
5	1	EA	23639-000	LABEL/ESD SENSITIVE,1.5"X.375"
6	1	EA	22428-029	CABLE ASSY/CARD MECH,PAN
7	1	EA	10005-201	WIRE TIE/4",5/8"MAX DIA
8	1	FT	10279-275	WIRE/STRANDED,20GA,YELLOW
9	1	EA	13697-301	CONNECTOR/PLUG,4CKT,.062,MAT
10	2	EA	13697-296	CONNECTOR/PIN,MALE,24-18G,.062
11	0	FT	11153-200	TUBING/HEAT SHRINK,1/8" OD
12	0	FT	15107-000	TUBING/HEAT SHRINK,1/4" OD
13	5	EA	24056-000	CARD/CLEANING,CARD READER
20	1	EA	23605-000	LABEL/CREDIT CARD,AMTT,BASIC

NOTES:

1. THESE MODIFICATIONS ARE NEEDED TO THE CARD MECHANISM CABLE (ITEM #6).
   1. CUT THE BLACK AND YELLOW WIRES TO 15" LONG FROM THE 5 PIN CONNECTOR.
   2. SOLDER AND CRIMP PINS (ITEM #10) ON THE END OF THE YELLOW AND BLACK WIRES.
   3. INSERT THE YELLOW WIRE INTO THE CONNECTOR (ITEM #9) IN LOCATION #1.
   4. INSERT THE BLACK WIRE INTO THE CONNECTOR (ITEM #9) IN LOCATION #2.

2. PLACES CLEANING CARDS (ITEM #13) INSIDE THE HEAD ASSEMBLY WITH THE RYKO SUPPLIED MANUALS.

3. PLACE CREDIT CARD LABEL (ITEM #20) INSIDE THE INSTALL MANUAL OF THE COIN BOX.

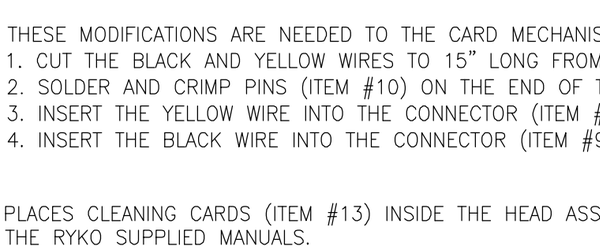

CABLE MODIFICATION VIEW

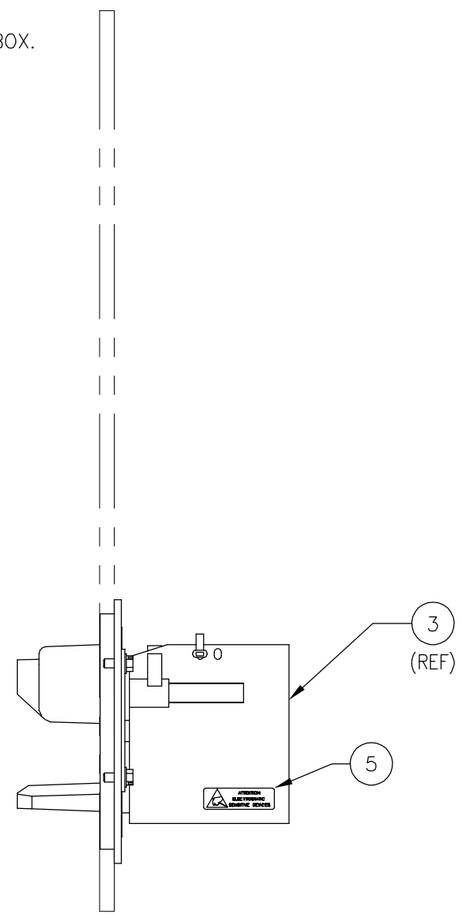

SIDE VIEW OF COIN BOX DOOR

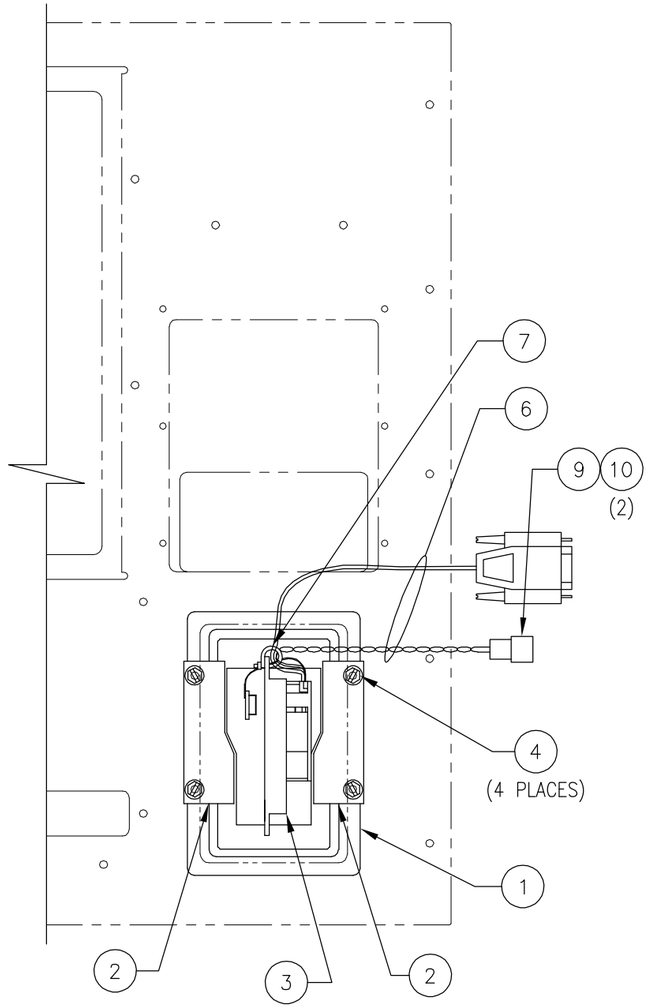

BACK VIEW OF COIN BOX DOOR

LTR	ECO	DESCRIPTION	BY	DATE	APVD
A	0105–008	REPLACED SCREWS	MB	1/24/05	RB
–	0804–087	RELEASING DRAWING	MB	9/13/04	RB

FORM #19477–037 REV B 01/20/97

PRODUCT: AMTT CS

TOLERANCES UNLESS OTHERWISE SPECIFIED: —

1. ALL SPECIFICATIONS SUBJECT TO CHANGE WITHOUT NOTICE.
2. UNLESS OTHERWISE SPECIFIED, ALL DIMENSIONS ARE IN INCHES.

MATERIAL: SEE PRODUCT STRUCTURE

SCALE: NONE — DATE: 9/1/04

DRAWN: BEERENDS — CHK'D: TB/JL

APVD: RB — DATE: 9/13/04

RYKO® MFG. CO. U.S.A.
GRIMES, IOWA 50111

CARD MECH OPT/ AMTT CS,PAN

REV. A — DWG. NO. 25929–003

PRINTER OPTION/AMTT CS

PART NO. 25930-000 REVISION G

ITEM	QTY.	UOM	PART NO.	DESCRIPTION
1	1	EA	25907-000	PRINTER ASSEMBLY
2	1	EA	25889-002	COMPARTMENT SWLDT/RECEIPT
3	1	EA	25881-000	WINDOW/PRINTER RECEIPT
4	1	EA	25883-003	LABEL/RECEIPT WINDOW
5	3	EA	11488-205	CLAMP/CABLE,3/8"DIA,BLK NYLON
6	1	EA	10034-278	SCREW/MACH,#8-32X3/8,SLHWH,SS
7	1	EA	10034-277	SCREW/MACH,#8-32X1/4,SLHWH,SS
8	1	EA	10034-274	SCREW/MACH,#6-32X3/8,SLHWH,SS
9	5	EA	10034-273	SCREW/MACH,#6-32X1/4,SLHWH,SS
10	1	EA	15552-001	SPINDLE/PAPER HOLDER,CAWIV
11	10	EA	15421-813	PRINTER PAPER/THERMAL,CSI
13	1	EA	25889-001	COMPARTMENT/RECEIPT HOLDER,COV
14	1	EA	12090-201	NUT/WING,1/4-20,PLATED
15	1	EA	26276-000	LABEL/NOTICE,PRINTER OPERATION

NOTES:

1. ROUTE BOTH THE PRINTER POWER CABLE AND THE PARALLEL CABLE THROUGH THE CABLE CLAMPS (ITEM #5) AND THEN ROUTE WITH OTHER CABLES ON DOOR. REFER TO THE HEAD ASSEMBLY FOR CABLE TERMINATION.

B 2. PLACE LABEL (ITEM #4) ON RECEIPT WINDOW (ITEM #3). CENTERED ON WINDOW AND 1/8" FROM BOTTOM OF WINDOW.

A 3. DO NOT INSTALL PRINTER PAPER ROLL ON PRINTER, PLACE ROLLS OF PAPER (ITEM #11) IN COIN BOX HEAD AND SHIP WITH COMPLETED COINBOX ASSEMBLY.

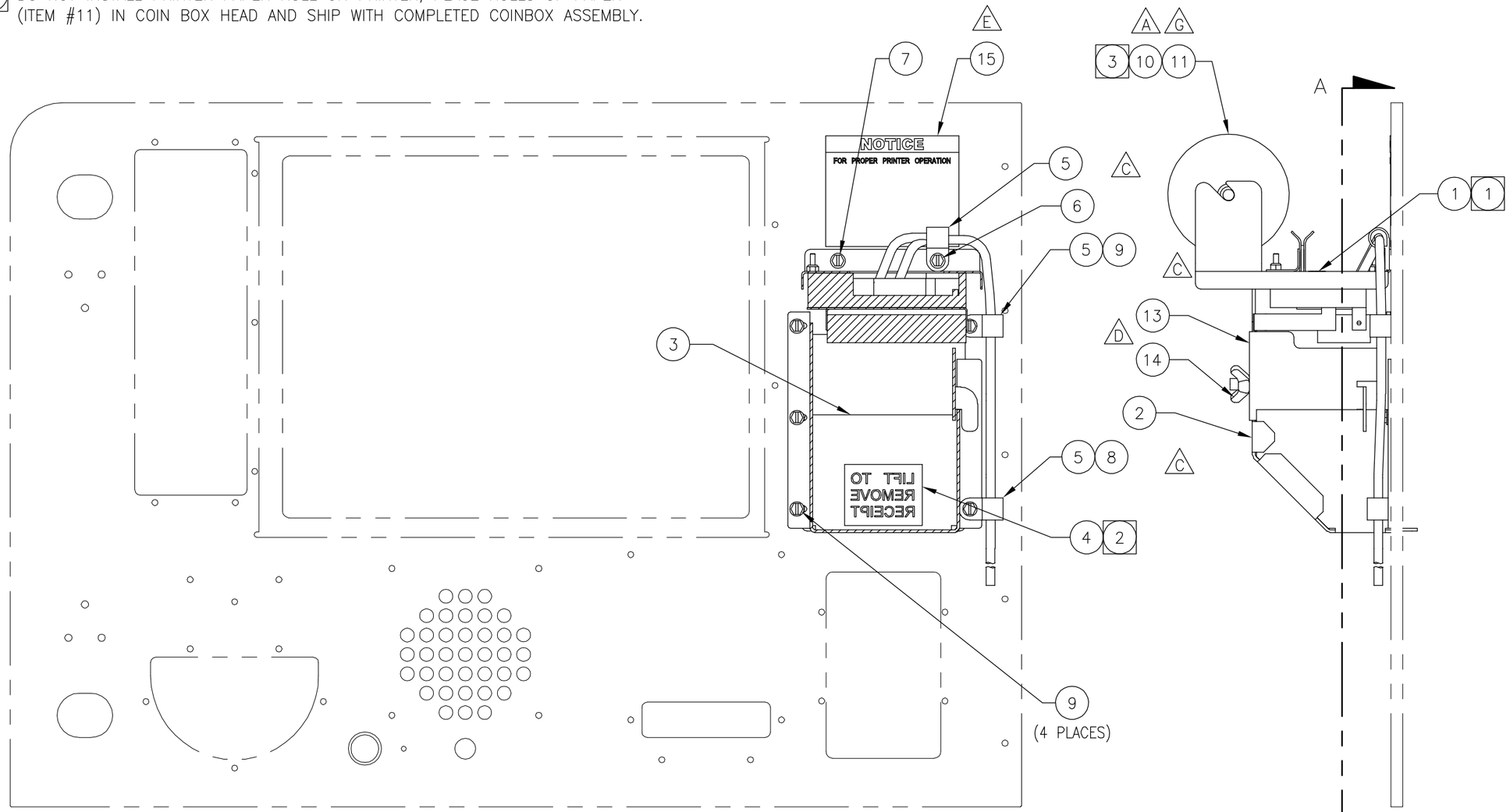

SECTION A–A
(BACK VIEW OF COIN BOX DOOR)

SIDE VIEW OF COIN BOX DOOR

LTR	ECO	DESCRIPTION	BY	DATE	APVD
G	0506-098	REVISED ITEM #11 ON P/S	KS	6/7/06	RB

FORM #19477-037 REV B 01/20/97

PRODUCT AMTT CS

TOLERANCES UNLESS OTHERWISE SPECIFIED

1. ALL SPECIFICATIONS SUBJECT TO CHANGE WITHOUT NOTICE.
2. UNLESS OTHERWISE SPECIFIED, ALL DIMENSIONS ARE IN INCHES.

MATERIAL SEE PRODUCT STRUCTURE

SCALE NONE | DATE 1/7/03
DRAWN M SMITH | CHK'D WA/MB
APVD RB | DATE 1/16/04

RYKO® MFG. CO. U.S.A.
GRIMES,IOWA 50111

PRINTER OPTION/ AMTT CS

REV. G | DWG. NO. 25930-000

KEYED ALIKE ASSY/BA,KEY DIFF

PART NO. 26187-000 REVISION -

ITEM	QTY.	UOM	PART NO.	DESCRIPTION
1	1	EA	26181-000	LOCK WLDT/BILL ACCEPTOR
2	1	EA	11119-217	PADLOCK/KEYED DIF,3/16DIA SHKL
3	1	EA	10005-201	WIRE TIE/4",5/8"MAX DIA

NOTES:

1. WITH THE BILL MAGAZINE INSTALLED INTO THE BILL ACCEPTOR, OPEN THE LOCK WELDMENT 45° (OR AS NEEDED) AND INSERT THE LOCK TABS OF ONE SIDE OF THE LOCK WELDMENT INTO THE MAGAZINE SLOTS AND CLOSE THE LOCK WELDMENT INSERTING THE LOCK TABS OF THE OPPOSITE SIDE OF THE LOCK WELDMENT INTO THE MAGAZINE SLOTS.

2. THE BILL ACCEPTOR SHOWN HAS THE RECEIVER SHOWN IN THE STANDARD CONFIGURATION. THE RECEIVER CAN ALSO BE MOUNTED IN A COMPACT CONFIGURATION WHICH DOES NOT AFFECT HOW THE BILL MAGAZINE OR LOCK ASSEMBLY MOUNTS TO THE BILL ACCEPTOR.

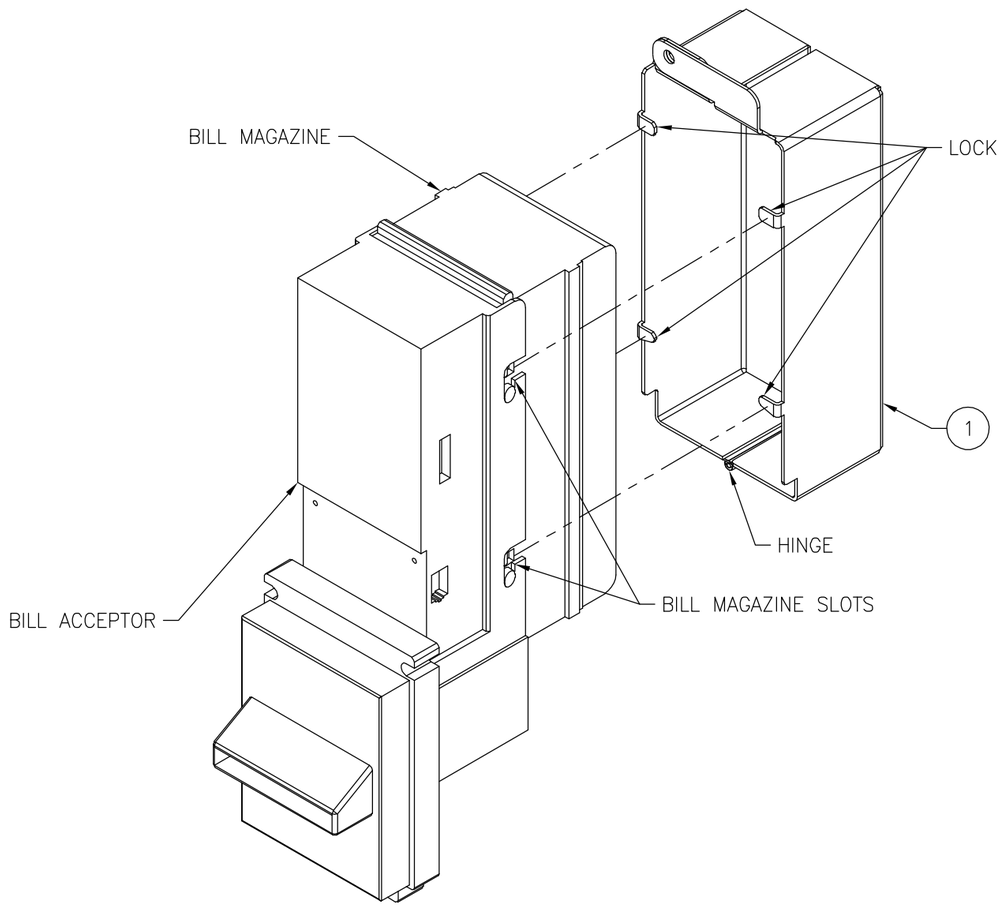

1 LOCKING HASP INSTALLATION

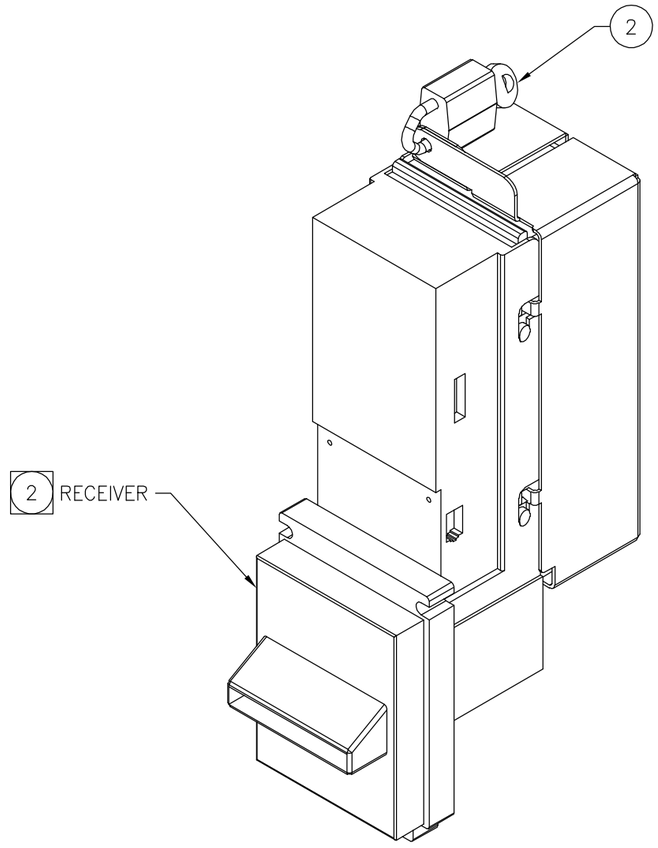

PADLOCK INSTALLATION

-015 KEYED ALIKE ASSY/BA,KEY #15
-014 KEYED ALIKE ASSY/BA,KEY #14
-013 KEYED ALIKE ASSY/BA,KEY #13
-012 KEYED ALIKE ASSY/BA,KEY #12
-011 KEYED ALIKE ASSY/BA,KEY #11
-010 KEYED ALIKE ASSY/BA,KEY #10
-009 KEYED ALIKE ASSY/BA,KEY #9
-008 KEYED ALIKE ASSY/BA,KEY #8
-007 KEYED ALIKE ASSY/BA,KEY #7
-006 KEYED ALIKE ASSY/BA,KEY #6
-005 KEYED ALIKE ASSY/BA,KEY #5
-004 KEYED ALIKE ASSY/BA,KEY #4
-003 KEYED ALIKE ASSY/BA,KEY #3
-002 KEYED ALIKE ASSY/BA,KEY #2
-001 KEYED ALIKE ASSY/BA,KEY #1
-000 KEYED ALIKE ASSY/BA,KEY DIFF

LTR	DESCRIPTION	RELEASING DRAWING	BY	DATE	APVD
–	ECO	0504-080	AM	5/25/04	RB

FORM #19477-037 REV B 01/20/97

PRODUCT: AMTT

TOLERANCES UNLESS OTHERWISE SPECIFIED

1. ALL SPECIFICATIONS SUBJECT TO CHANGE WITHOUT NOTICE.
2. UNLESS OTHERWISE SPECIFIED, ALL DIMENSIONS ARE IN INCHES.

MATERIAL: SEE PRODUCT STRUCTURE

SCALE: NONE | DATE: 5/17/04
DRAWN: AMULLEN | CHK'D: KC/MB
APVD | DATE: 5/25/04
RB | 5/25/04

RYKO® MFG. CO.
GRIMES,IOWA 50111 U.S.A.

KEYED ALIKE ASSY/ BA,KEY

REV. –
DWG. NO. 26187-000

HEAD ASSY/PEDESTAL,AMTT CS

PART NO. 25905-000 REVISION D

ITEM	QTY.	UOM	PART NO.	DESCRIPTION
1	1	EA	22450-003	HEAD WLDT/AMTT,SS
2	1	EA	22366-002	HOOD/COIN BOX,SS
3	1	EA	22582-001	BACK/COIN BOX,SS,LOUVERED
4	4	EA	10783-204	BOLT/CARRIAGE,5/16-18x1",SS
5	4	EA	11377-000	SPACER/AL,1/2ODx1/2LG
10	12	EA	10783-214	BOLT/CARRIAGE,5/16-18X3/4",SS
11	4	EA	12971-002	WASHER/DISH,BONDED NEO,5/16
12	19	EA	10878-206	NUT/ 5/16-18,NYL INS,ZN PL
13	3	EA	10428-203	WASHER/FLAT,5/16"SAE,SS
14	4	EA	11871-203	STANDOFF/5/16-18,5/8HEXx7/8"LG
15	2	EA	10116-001	COIN BOX LOCKNUT/ 1/2-13
16	4	EA	10877-220	SCREW/HHC,1/4-20x3/4,SS
17	1	EA	11695-200	THREADLOCK COMPOUND
18	5	FT	12116-000	GASKET MATL/NEO,PSA,3/8"x1/8"
19	1	EA	13737-012	SERIAL PLATE/COINBOX,AMTT CS
20	1	EA	15962-001	LABEL/FCC COMPLIANCE
21	5	EA	10034-277	SCREW/MACH,#8-32X1/4,SLHWH,SS
22	1	EA	25913-000	DOOR ASSY/AMTT CS
23	1	EA	25910-000	PANEL ASSY/AMTT CS
24	1	EA	22477-001	DOOR SWITCH ASSY/AMTT CS
25	4	EA	16679-007	NUT/RIVET,AL,#6-32,.120 GRIP
26	4	EA	21702-000	SCREW/MACH,#6-32X1-3/4",PH,SS
27	1	EA	15544-005	FAN/COOLING,24VDC,92MM
28	1	EA	15544-006	FAN GUARD/92MM,FILTER
29	1	EA	13697-298	CONNECTOR/PLUG,2CKT,.062
30	2	EA	13697-296	CONNECTOR/PIN,MALE,24-18G,.062
31	1	EA	21869-036	INSULATION/FOAM,AMTT,BOTTOM
32	1	EA	21869-034	INSULATION/FOAM,AMTT CS,BACK
33	1	EA	21869-033	INSULATION/FOAM,AMTT CS,HINGE
34	1	EA	21869-021	INSULATION/FOAM,AMTT,LOCK SIDE
35	1	EA	21869-024	INSULATION/FOAM,AMTT,TOP
36	2	EA	21869-025	INSULATION/FOAM,AMTT,CORNER ST
50	1	EA	25920-000	ELEC SCHEMATIC/AMTT CS

NOTES:

(1) WHEN INSTALLING THE FOAM INSULATION AND GASKETS AROUND DOOR FOLLOW THESE STEPS FOR EASE OF INSTALLATION AND PROPER FIT. CLEAN ALL INSIDE SURFACES OF THE COINBOX CABINET AND DOOR GASKET SURFACE WITH ISOPROPYL ALCOHOL. PEEL PAPER FROM BACK AND PLACE AGAINST THE SURFACE OF THE COIN BOX.

1. BOTTOM (ITEM #31)
2. BACK (ITEM #32)
3. HINGE SIDE (ITEM #33)
4. LOCK SIDE (ITEM #34)
5. TOP (ITEM #35)
6. TOP HINGE CORNER (ITEM #36)
7. TOP LOCK CORNER (ITEM #36)
8. GASKET (ITEM #18) CUT GASKET TO FIT INTO CORNER AS REQUIRED. (C)

(3) APPLY THREADLOCK COMPOUND (ITEM #17) TO THREADS OF SCREW (ITEM #16). ATTACH COIN BOX LOCKNUT (ITEM #15) (WITH THE CHAMFERED SIDE FACING THE FRONT) TO HEAD WELDMENT (ITEM #1) AS SHOWN. AFTER FASTENING WITH SCREWS HAND TIGHT, BACK OUT SCREWS 1 TURN AND ALLOW THREADLOCK COMPOUND TO SET UP.

(4) SOME ITEMS NOT SHOWN FOR CLARITY.

(5) MOUNT ALL OPTIONS ONTO THE DOOR ASSEMBLY (ITEM #22) BEFORE INSTALLING THE DOOR ON THE HEAD WELDMENT (ITEM #1).

(6) THE HALF OF THE DOOR SWITCH ASSEMBLY (ITEM #24) WITH WIRES MOUNTS TO THE HEAD WELDMENT. THE OTHER HALF OF THE DOOR SWITCH ASSEMBLY (MAGNET) MOUNTS ON THE DOOR. CONNECT THE DOOR SWITCH WIRES WITH THE WIRE CONNECTOR OFF OF THE RIGHT SIDE OF THE PANEL ASSEMBLY (ITEM #23). TUCK BOTH WIRES UNDER THE EDGES OF THE INSULATION TO KEEP APPEARANCE AS NEAT AS POSSIBLE.

(7) PLUG THE DOOR BASIC ASSEMBLY AND DOOR OPTION CABLE ASSEMBLIES INTO THE APPROPRIATE CONNECTORS ON THE LEFT SIDE OF THE PANEL.

(8) CONNECT THE WIRES FROM FAN (ITEM #27) TO CONNECTOR AND PINS (ITEM #29&#30). THE BLACK WIRE IS TO BE CONNECTED TO PIN 2 AND THE RED WIRE IS TO BE (A) CONNECTED TO PIN 1. REFER TO DETAIL D. ATTACHED CONNECTOR (ITEM #29) TO JP12 CONNECTOR ON THE PANEL ASSEMBLY (ITEM #23). BEFORE ATTACHING THE FAN GUARD (ITEM #28) REMOVE THE FAN GUARD FILTER AND DISCARD THE FILTER.

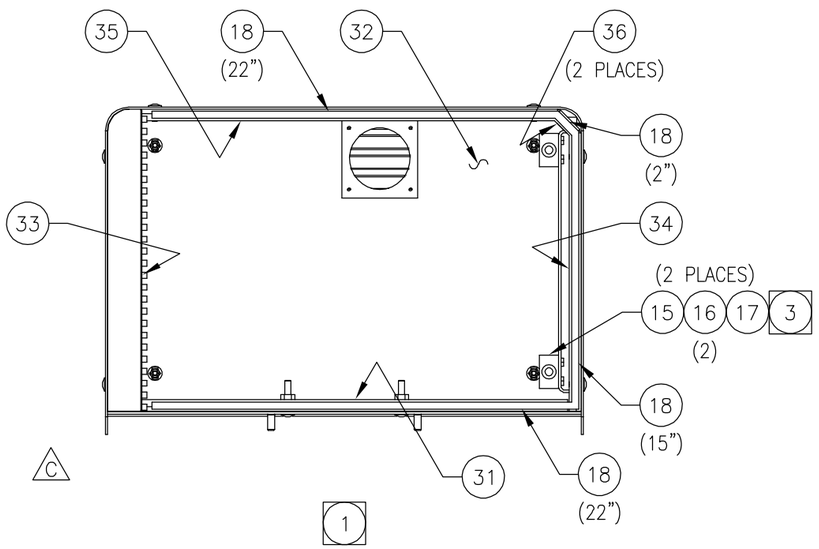

CABINET FRONT VIEW

(VARIOUS COMPONENTS NOT SHOWN FOR CLARITY)

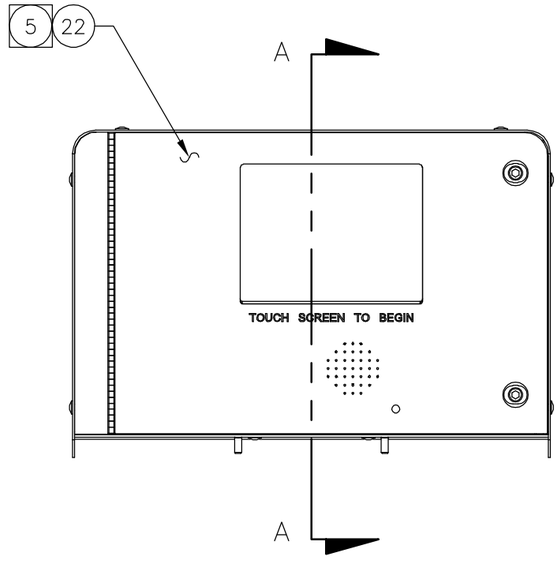

LTR	ECO	DESCRIPTION	BY	DATE	APVD
D	0805-093	REFER TO OTHER SHEETS	MB	8/30/05	RB
C	0205-064	REMOVED ENVIRONMENT SENSOR	MB	3/11/05	RB
B	0105-008	REFER TO OTHER SHEETS	MB	1/24/05	RB
A	0604-097	REV DOC ERROR NOTE #8	MB	6/29/04	RB
–	0104-086	RELEASING DRAWING	LE	2/23/04	RB

FORM #19477-037 REV B 01/20/97

PRODUCT: AMTT CS

TOLERANCES UNLESS OTHERWISE SPECIFIED

MATERIAL: SEE PRODUCT STRUCTURE

SCALE: NONE | DATE: 1/20/04

DRAWN: LE | CHK'D: DC/MB | DATE

APVD: RB | DATE: 2/23/04

1. ALL SPECIFICATIONS SUBJECT TO CHANGE WITHOUT NOTICE.
2. UNLESS OTHERWISE SPECIFIED, ALL DIMENSIONS ARE IN INCHES.

RYKO® MFG. CO. U.S.A.
GRIMES,IOWA 50111

HEAD ASSY/ PEDESTAL,AMTT CS

REV. D | DWG. NO. 25905-000

SHEET 1 OF 4

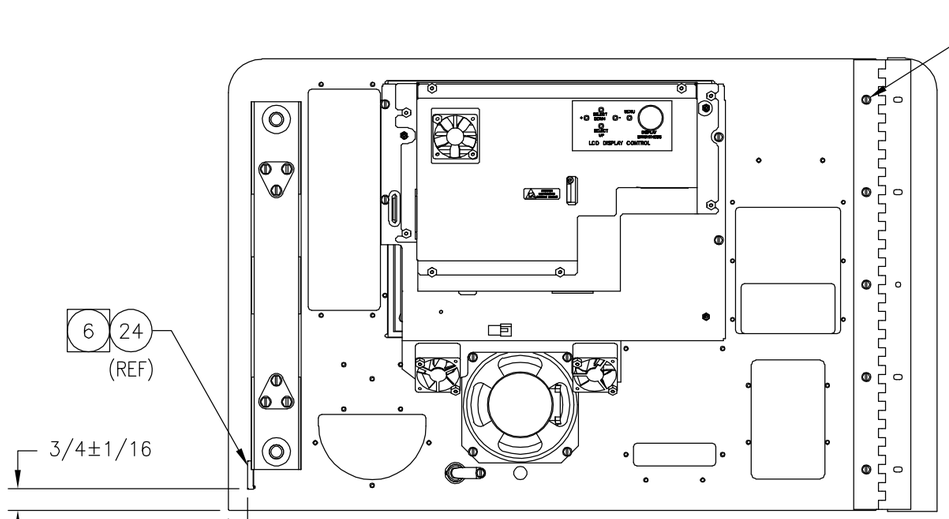

BACK VIEW OF COIN FACE
(ITEMS REMOVED FOR CLARITY)

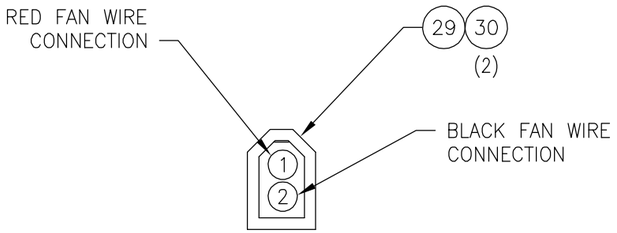

DETAIL D
(NOT TO SCALE ENLARGED FOR CLARITY) 8

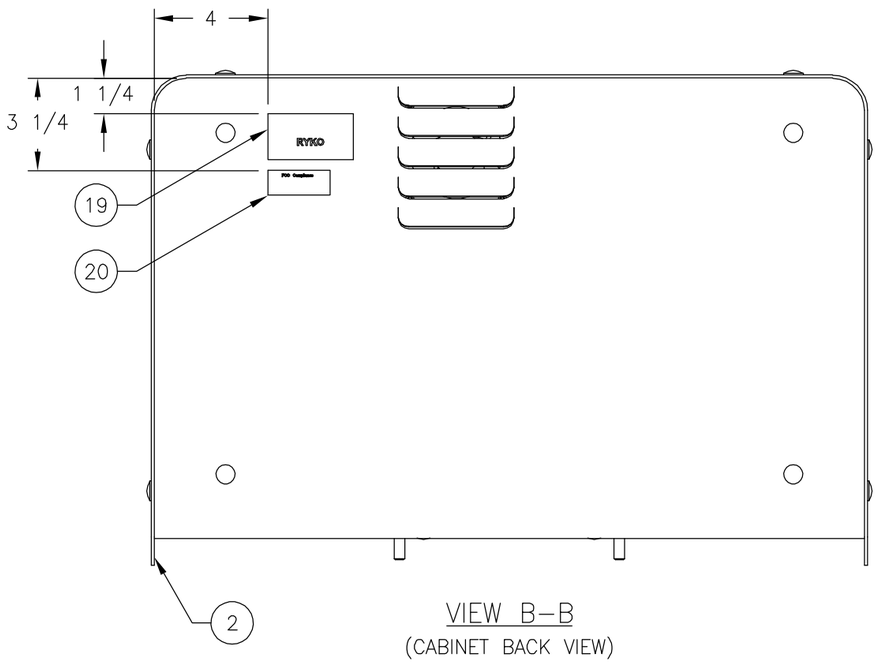

VIEW B–B
(CABINET BACK VIEW)

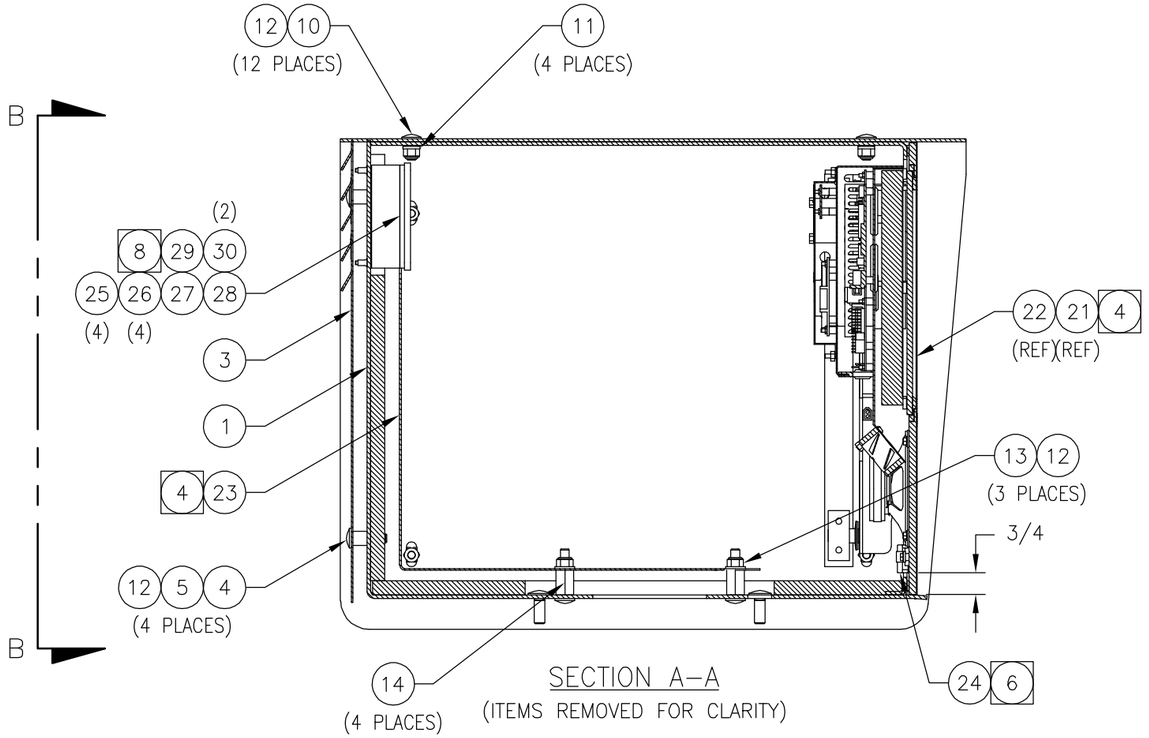

SECTION A–A
(ITEMS REMOVED FOR CLARITY)

LTR	ECO	DESCRIPTION	BY	DATE	APVD
D	0805–093	REPLACED BACK PANEL (ITEM #3)	MB	8/30/05	RB
C	0205–064	REMOVED ENVIRONMENT SENSOR	MB	3/11/05	RB
B	0105–008	REPLACED SCREWS	MB	1/24/05	RB
A	0604–097	REFER TO OTHER SHEETS	MB	6/29/04	RB
–	0104–086	RELEASING DRAWING	LE	2/23/04	RB

FORM #19477–037 REV B 01/20/97

PRODUCT: AMTT CS

TOLERANCES UNLESS OTHERWISE SPECIFIED

MATERIAL: SEE PRODUCT STRUCTURE

SCALE: NONE | DATE: 1/20/04

DRAWN: LE | CHK'D: DC/MB

APVD: RB | DATE: 2/23/04

1. ALL SPECIFICATIONS SUBJECT TO CHANGE WITHOUT NOTICE.
2. UNLESS OTHERWISE SPECIFIED, ALL DIMENSIONS ARE IN INCHES.

RYKO® MFG. CO. U.S.A.
GRIMES,IOWA 50111

HEAD ASSY/ PEDESTAL,AMTT CS

REV. D | DWG. NO. 25905–000

SHEET 2 OF 4

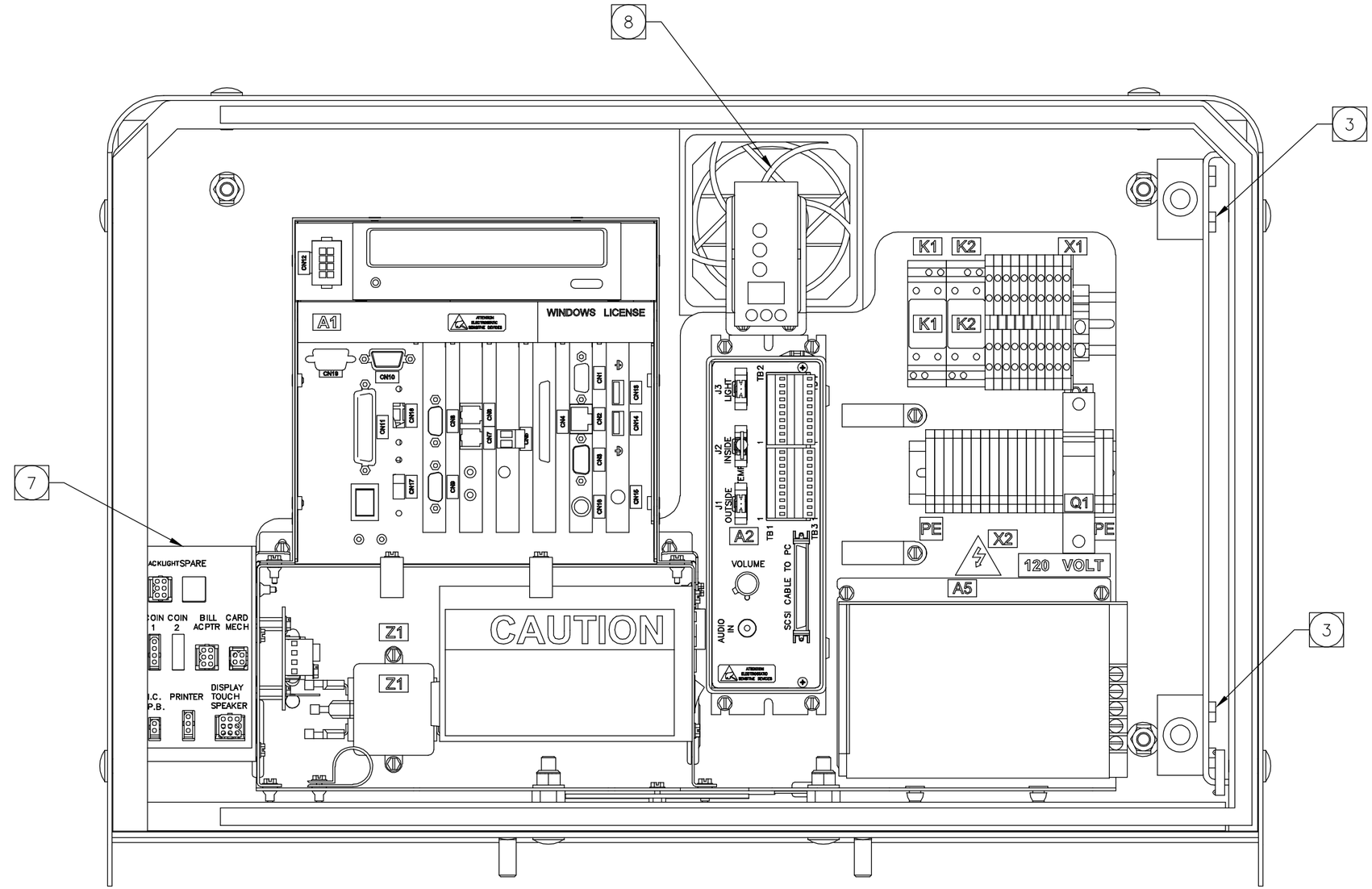

CABINET FRONT VIEW

(VARIOUS COMPONENTS NOT SHOWN FOR CLARITY)

LTR	ECO	DESCRIPTION	BY	DATE	APVD
D	0805–093	REFER TO OTHER SHEETS	MB	8/30/05	RB
C	0205–064	REMOVED ENVIRONMENT SENSOR	MB	3/11/05	RB
B	0105–008	REFER TO OTHER SHEETS	MB	1/24/05	RB
A	0604–097	REFER TO OTHER SHEETS	MB	6/29/04	RB
–	0104–086	RELEASING DRAWING	LE	2/23/04	RB

FORM #19477–037 REV B 01/20/97

PRODUCT: AMTT CS

TOLERANCES UNLESS OTHERWISE SPECIFIED

MATERIAL: SEE PRODUCT STRUCTURE

SCALE: NONE | DATE: 1/20/04

DRAWN: LE | CHK'D: DC/MB

APVD: RB | DATE: 2/23/04

1. ALL SPECIFICATIONS SUBJECT TO CHANGE WITHOUT NOTICE.
2. UNLESS OTHERWISE SPECIFIED, ALL DIMENSIONS ARE IN INCHES.

RYKO® MFG. CO. U.S.A.
GRIMES,IOWA 50111

HEAD ASSY/ PEDESTAL,AMTT CS

REV. D | DWG. NO. 25905–000

SHEET 3 OF 4

CONNECTOR BRACKET

(ATTACH CABLES FROM THE DOOR AS LABELED)

(IF OPTION IS NOT PRESENT SOME CONNECTORS WILL NOT BE USED)

PC CHASSIS

(ATTACH CABLES AS SHOWN)

LTR	ECO	DESCRIPTION	BY	DATE	APVD
D	0805–093	REFER TO OTHER SHEETS	MB	8/30/05	RB
C	0205–064	REMOVED ENVIRONMENT SENSOR	MB	3/11/05	RB
B	0105–008	REFER TO OTHER SHEETS	MB	1/24/05	RB
A	0604–097	REFER TO OTHER SHEETS	MB	6/29/04	RB
–	0104–086	RELEASING DRAWING	LE	2/23/04	RB

PRODUCT: AMTT CS

TOLERANCES UNLESS OTHERWISE SPECIFIED

MATERIAL: SEE PRODUCT STRUCTURE

SCALE: NONE | DRAWN: LE | DATE: 1/20/04 | CHK'D: DC/MB | APVD: RB | DATE: 2/23/04

1. ALL SPECIFICATIONS SUBJECT TO CHANGE WITHOUT NOTICE.
2. UNLESS OTHERWISE SPECIFIED, ALL DIMENSIONS ARE IN INCHES.

RYKO® MFG. CO. U.S.A.
GRIMES,IOWA 50111

HEAD ASSY/ PEDESTAL,AMTT CS

REV: D | DWG. NO. 25905–000

SHEET 4 OF 4

FORM #19477–037 REV B 01/20/97

PEDESTAL ASSY/SS,AMTT CB,TALL

PART NO. 22508-005 REVISION A

ITEM	QTY.	UOM	PART NO.	DESCRIPTION
1	1	EA	22584-005	PEDESTAL WLDT/SS COIN BOX,TALL
4	1	EA	22371-000	PHOTO EYE MT/COIN BOX
5	1	EA	12703-024	PHOTOELECTRIC RECEIVER
6	1	EA	12703-023	PHOTOELECTRIC EMITTER
8	1	EA	15544-005	FAN/COOLING,24VDC,92MM
9	1	EA	10286-000	CONNECTOR HOUSING/PIN,8CIRCUIT
10	8	EA	10288-000	CONNECTOR/PIN,20-14GA,.130
11	4	EA	21702-000	SCREW/MACH,#6-32X1-3/4",PH,SS
12	4	EA	16679-007	NUT/RIVET,AL,#6-32,.120 GRIP
14	6	EA	10039-206	SCREW/MACH,#8-32x1/2,PH,SS
15	6	EA	10878-203	NUT/ #8-32,NYL INS,ZN PL
17	1	EA	11120-201	LOCK/CAM,w/KEYS,5/8"
18	1	EA	10368-001	HANDLE/DOOR PULL,PANEL
19	2	EA	10034-248	SCREW/MACH,1/4-20x1/2,HWH,SS
20	3	EA	15483-003	MOUNTING PAD/CABLE,ADHESIVE
21	1	EA	12388-000	SHOP PROC/WIRE CONNECTIONS
23	1	EA	13623-003	BAG/PLASTIC,LOCKING,3"x4"
24	7	FT	10280-210	WIRE/STRANDED,24GA,WHITE&BLACK
25	3	EA	10005-201	WIRE TIE/4",5/8"MAX DIA
26	1	EA	17912-000	SHOP PROC/SHIELDED CABLE ENDS
27	0	FT	14181-000	TUBING/HEAT SHRINK,3/16" OD
28	0	FT	18612-000	TUBING/HEAT SHRINK,1/8",W/ADH
29	1	EA	24421-000	LABEL/"NO CASH"
30	1	EA	23152-002	BOX ASSY/SENSOR HOUSING,PED
31	4	EA	10039-201	SCREW/MACH,#6-32x1/2,PH,SS
32	2	EA	26549-000	DUCT MOUNT WLDT
33	1	FT	26548-000	DUCT/AIR,3"ID
34	2	EA	10024-210	CLAMP/WORM GEAR,2-13/16"-3.75"

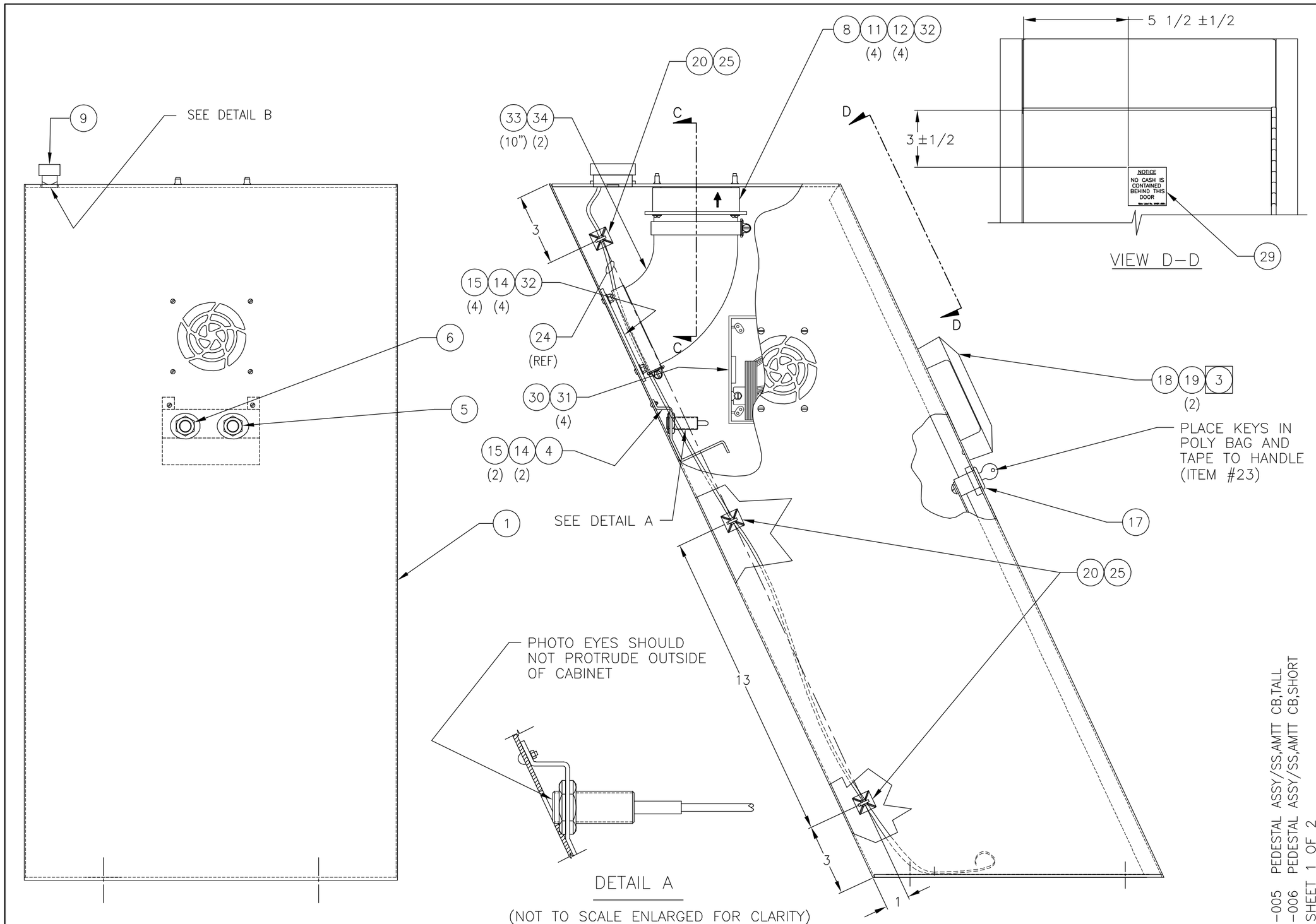

-005 PEDESTAL ASSY/SS,AMTT CB,TALL
-006 PEDESTAL ASSY/SS,AMTT CB,SHORT
SHEET 1 OF 2

LTR	DESCRIPTION	BY	DATE	APVD
A	1105-051 REMOVED WASHER, SHORTENED TUBE	MB	11/11/05	RB
–	0805-093 RELEASING DRAWING	MB	8/30/05	RB
	ECO			

PRODUCT: AMTT, AMTT CS

TOLERANCES UNLESS OTHERWISE SPECIFIED

MATERIAL: SEE PRODUCT STRUCTURE
SCALE: NONE
DRAWN: BEERENDS
DATE: 8/26/05
CHK'D: KC/MB
APVD
DATE: 8/30/05
RB

1. ALL SPECIFICATIONS SUBJECT TO CHANGE WITHOUT NOTICE.
2. UNLESS OTHERWISE SPECIFIED, ALL DIMENSIONS ARE IN INCHES.

RYKO® MFG. CO. U.S.A.
GRIMES,IOWA 50111

PEDESTAL ASSY/ SS,AMTT CB, TALL

REV. A
DWG. NO. 22508-005

FORM #19477-037 REV B 01/20/97

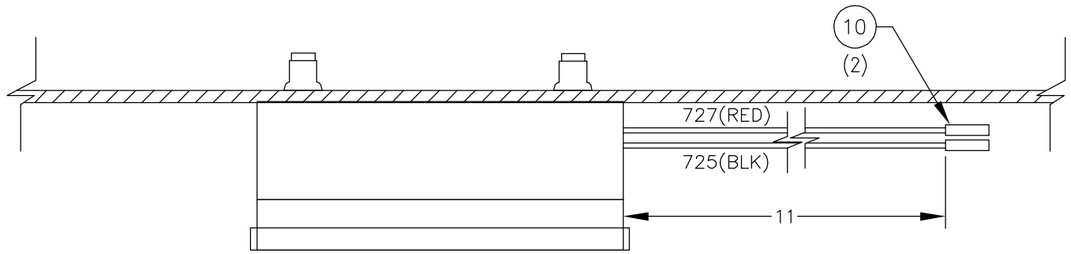

NOTES:

1. 732 AND 733 ARE A CONTINUOUS LOOP OF WIRE, DO NOT CUT. LEAVE EXCESS WIRE AT BOTTOM OF PEDESTAL.
2. COVER PHOTOEYE CABLES WITH SHRINK TUBING (ITEM #27 & #28) FOLLOWING SHOP PROCEDURE (ITEM #26).
3. IF DESIRED BY SHIPPING, THE HANDLE (ITEM #18) CAN BE MOUNTED TO THE INSIDE OF THE PEDESTAL DOOR. IF THE HANDLE IS MOUNTED TO THE INSIDE, THE DOOR MUST NOT BE LOCKED.

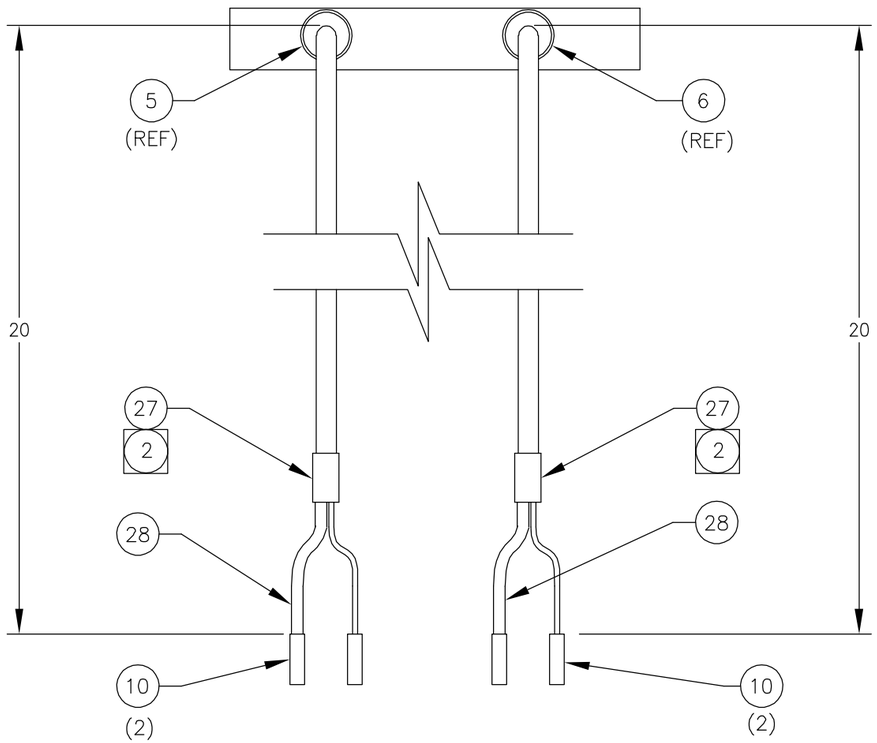

SECTION C–C
(ENLARGED FOR CLARITY)

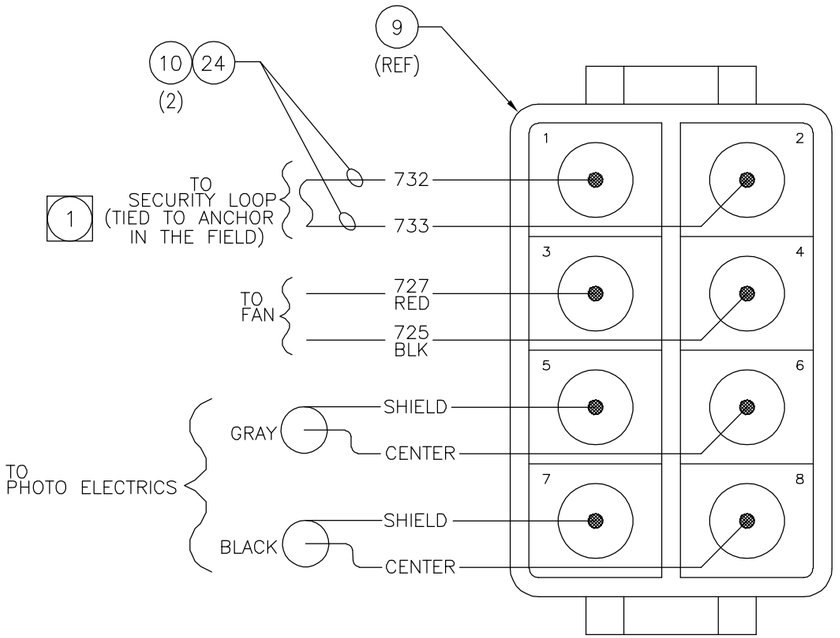

DETAIL B – ELECTRICAL PLUG
(ENLARGED FOR CLARITY)
(BOTTOM VIEW)

-005 PEDESTAL ASSY/SS,AMTT CB,TALL
-006 PEDESTAL ASSY/SS,AMTT CB,SHORT
SHEET 2 OF 2

LTR	DESCRIPTION	ECO	BY	DATE	APVD
A	REFER TO OTHER SHEET	1105–051	MB	11/11/05	RB
–	RELEASING DRAWING	0805–093	MB	8/30/05	RB

PRODUCT: AMTT, AMTT CS

TOLERANCES
UNLESS OTHERWISE SPECIFIED
LOCATIONS: +2 –0

MATERIAL: SEE PRODUCT STRUCTURE
SCALE: NONE
DRAWN: BEERENDS
DATE: 8/26/05
CHK'D: KC/MB
APVD: RB
DATE: 8/30/05

1. ALL SPECIFICATIONS SUBJECT TO CHANGE WITHOUT NOTICE.
2. UNLESS OTHERWISE SPECIFIED, ALL DIMENSIONS ARE IN INCHES.

RYKO® MFG. CO.
GRIMES,IOWA 50111 U.S.A.

PEDESTAL ASSY/ SS,AMTT CB, TALL

REV. A
DWG. NO. 22508–005

FORM #19477–037 REV B 01/20/97

CABLE ASSY/BILL ACC,MARS

PART NO. 25914-002 REVISION D

ITEM	QTY.	UOM	PART NO.	DESCRIPTION
1	1	EA	13697-321	CONNECTOR/30PIN,FEM,WIRE IDC
2	13	EA	13697-357	CONNECTOR/SOCKET,WIRE IDC
3	2	EA	13697-323	CONNECTOR/POL PLUG
4	2	FT	14685-003	CABLE/5 CONDUCTOR,22GA STRD
5	1	EA	13697-302	CONNECTOR/PLUG,6CKT,.062
6	5	EA	13697-296	CONNECTOR/PIN,MALE,24-18G,.062
7	0	FT	15107-000	TUBING/HEAT SHRINK,1/4" OD

DWG. NO. 25914–002

NOTES:

1. THIS SYMBOL "•" DENOTES WHERE A BLANK PIN (ITEM #2) WITH NO WIRE ATTACHED SHOULD BE INSERTED INTO THE CONNECTOR TO FACILITATE HOLDING THE CONNECTOR SECURELY INTO THE SOCKET.

2. THIS SYMBOL "X" DENOTES WHERE A PIN (ITEM #2) IS INSERTED AND A BLANKING PLUG (ITEM #3) IS INSTALLED ON THE OTHER SIDE.

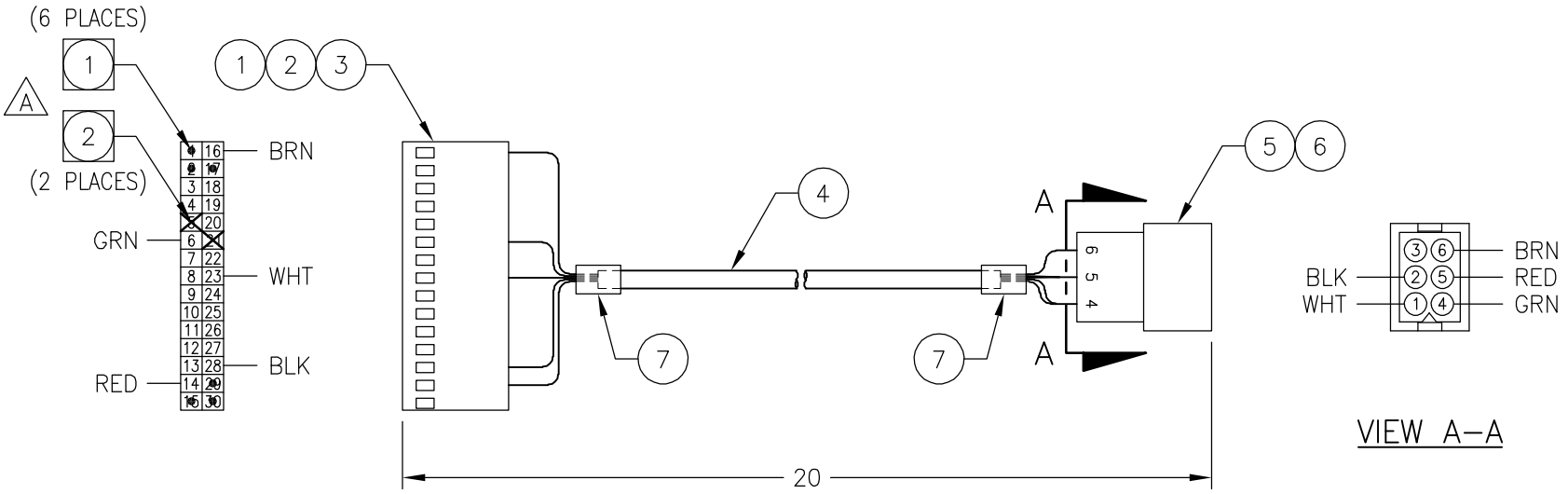

LTR	ECO	DESCRIPTION	BY	DATE	APVD
D	1105–058	REVISED PRODUCT STRUCTURE	MB	11/17/05	MAF
C	0204–091	REV VIEW CALLOUT; DEL NOTE 3	MB	2/23/04	RB
B	0204–001	REVISED WIRE COLORS GRN & WHT	MB	2/2/04	RB
A	0104–002	ADD PLACEMENT OF ITEMS 2 & 3	MB	1/23/03	GDL
–	1103–058	RELEASING DRAWING	MB	11/25/03	RB

PRODUCT: AMTT CS

TOLERANCES UNLESS OTHERWISE SPECIFIED
LOCATIONS: ±1

1. ALL SPECIFICATIONS SUBJECT TO CHANGE WITHOUT NOTICE.
2. UNLESS OTHERWISE SPECIFIED, ALL DIMENSIONS ARE IN INCHES.

MATERIAL: SEE PRODUCT STRUCTURE

SCALE: NONE | DATE: 11/11/03
DRAWN: BEERENDS | CHK'D: TB/SM
APVD: RB | DATE: 11/25/03

RYKO® MFG. CO.
GRIMES,IOWA 50111 U.S.A.

CABLE ASSY/ BILL ACC, MARS

DWG. NO. 25914–002 | REV. D

FORM #19477–036 REV A 01/18/96

CABLE ASSY/COIN SWITCH

PART NO. 25914-000 REVISION D

ITEM	QTY.	UOM	PART NO.	DESCRIPTION
2	3	FT	15709-001	CABLE/SHIELDED,22/4
3	4	EA	10495-201	TERMINAL/RCPT,SLIP,22-18G,RED
5	1	EA	11175-203	DIODE/SILICON,1AMP,100PRV
6	0	FT	15107-000	TUBING/HEAT SHRINK,1/4" OD
7	1	EA	13697-300	CONNECTOR/PLUG,4CKT,.062,INLIN
8	4	EA	13697-296	CONNECTOR/PIN,MALE,24-18G,.062

DWG. NO. 25914-000

NOTE

1. CUT OFF SHIELD CABLE.
2. CUT DIODE TO LENGTH AS SHOWN IN DIODE DETAIL. PUSH DIODE INTO TERMINAL AS FAR AS POSSIBLE LEAVING AS LITTLE OF THE DIODE WIRES EXPOSED AS POSSIBLE. BANDED END OF DIODE
D GOES TO THE RED WIRE SIDE. DIODE IS TO BE ON TOP OF THE WIRE IN THE TERMINAL AS SHOWN.

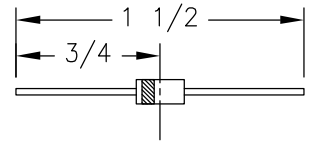

D DIODE DETAIL

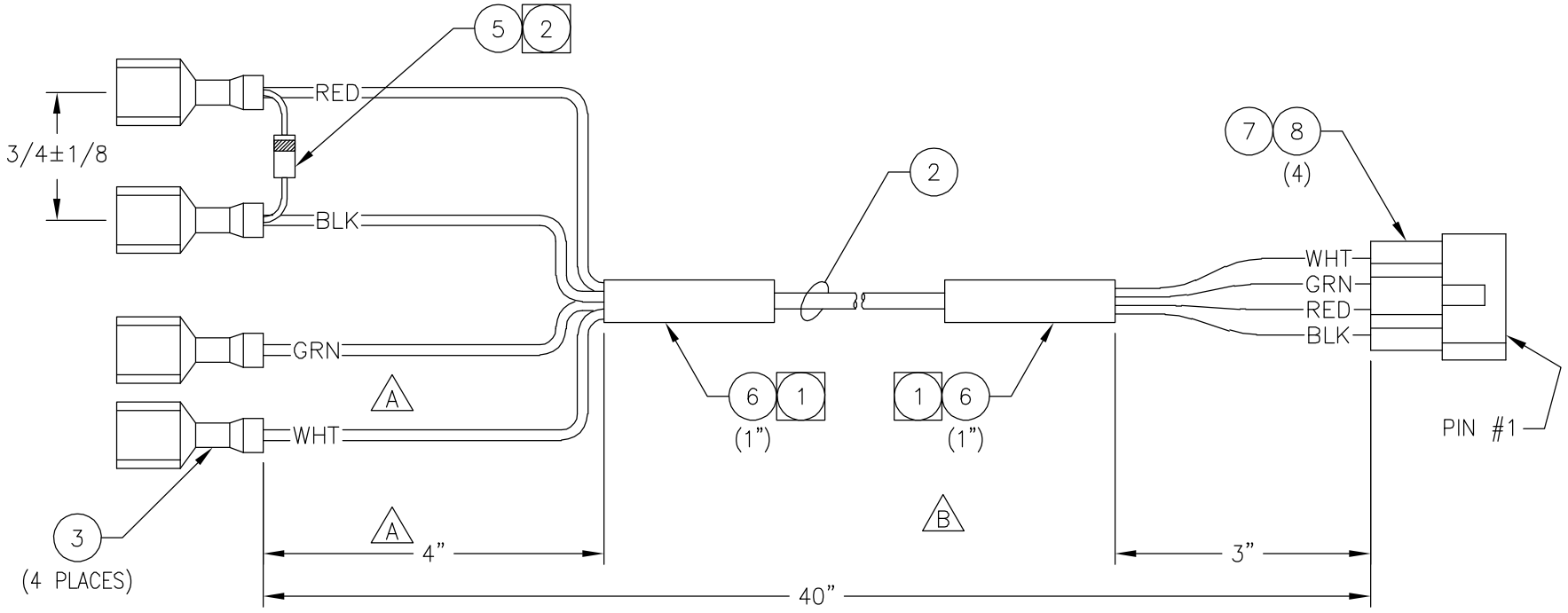

LTR	ECO	DESCRIPTION	BY	DATE	APVD
D	1204-111	REVISED NOTE #2 (DIODE INSTALL)	MB	12/29/04	RB
C	1004-113	REPLACED CABLE (ITEM #2)	MB	10/25/04	RB
B	0404-089	REV CABLE LENGTH	AM	4/19/04	RB
A	0104-002	REVISED WIRE LENGTHS (WHT&GRN)	MB	1/23/04	GDL
–	1003-192	RELEASING DRAWING	MB	11/25/03	RB

PRODUCT: AMTT CS

TOLERANCES UNLESS OTHERWISE SPECIFIED
LOCATIONS: ±1

1. ALL SPECIFICATIONS SUBJECT TO CHANGE WITHOUT NOTICE.
2. UNLESS OTHERWISE SPECIFIED, ALL DIMENSIONS ARE IN INCHES.

MATERIAL: SEE PRODUCT STRUCTURE

SCALE: NONE | DATE: 11/11/03
DRAWN: BEERENDS | CHK'D: TB/SM
APVD: RB | DATE: 11/25/03

RYKO® MFG. CO.
GRIMES,IOWA 50111 U.S.A.

CABLE ASSY/
COIN SWITCH

DWG. NO. 25914-000 | REV. D

FORM #19477-036 REV A 01/18/96

HOPPER/MOD,LOCKABLE,LG COIN

PART NO. 22182-001 REVISION D

ITEM	QTY.	UOM	PART NO.	DESCRIPTION
1	1	EA	22182-003	HOPPER/STANDARD,UNIVERSAL
2	1	EA	10305-206	TERMINAL/RING,#6,22-16G,RED

NOTES:

1. UNBOLT NUT FROM TERMINAL 2 AND CUT 2" OFF WIRE, DISCARD WIRE AND THE WIRE TERMINAL CONNECTOR.
2. CUT OFF WIRE GOING THROUGH PORT 3. INSTALL RING TERMINAL (ITEM #2) ONTO WIRE CUT FROM PORT 3, AND CONNECT ONTO TERMINAL 2. REPLACE NUTS ONTO TERMINAL 2.

△C

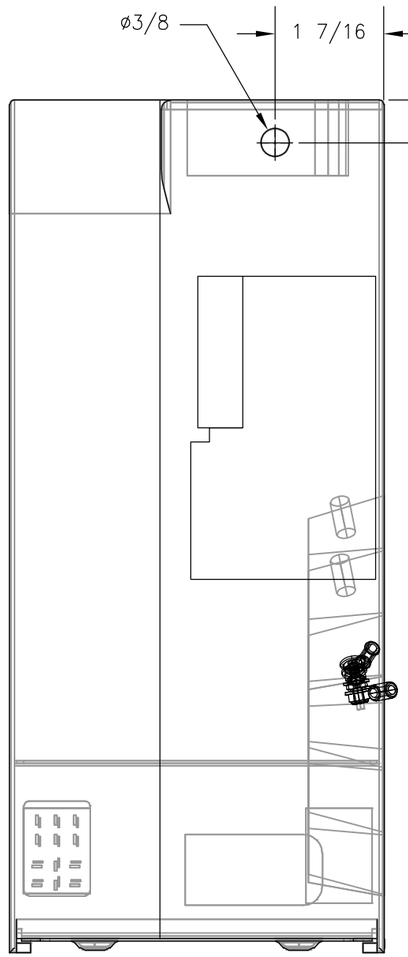

FRONT VIEW

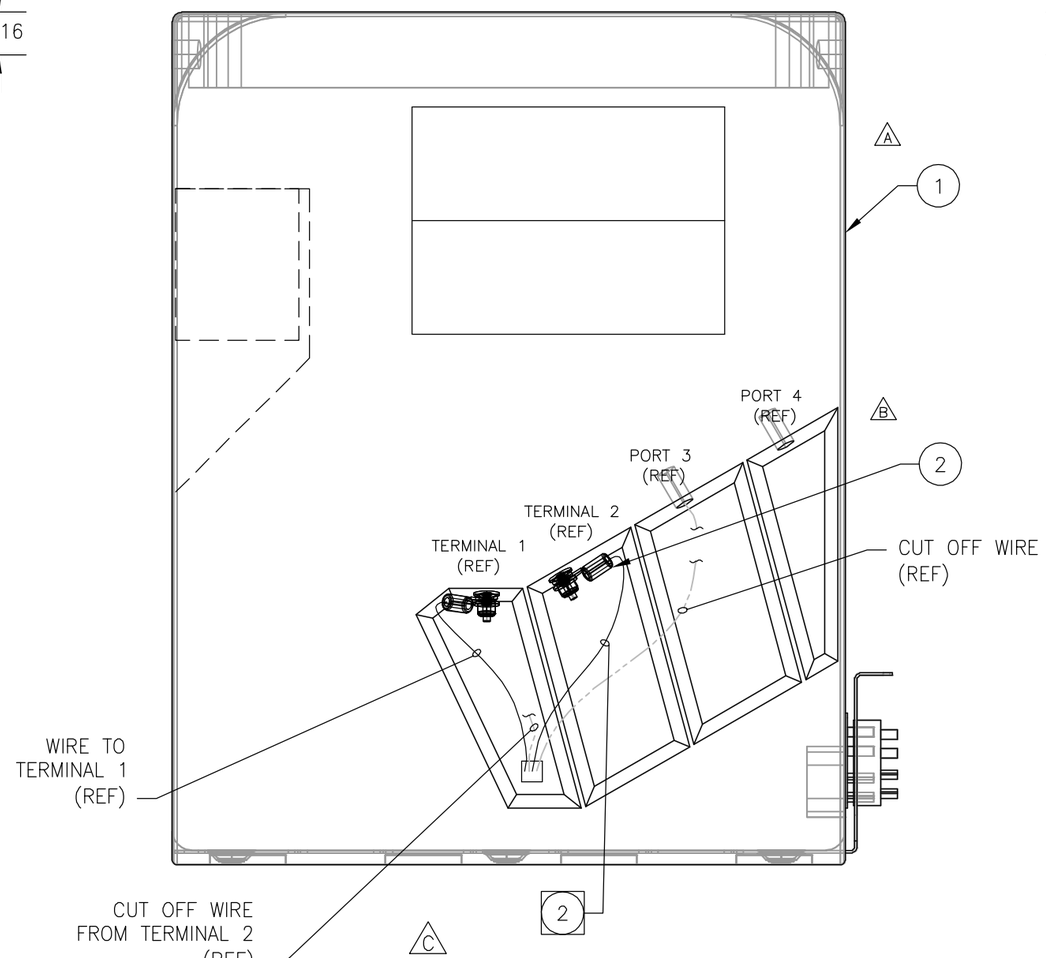

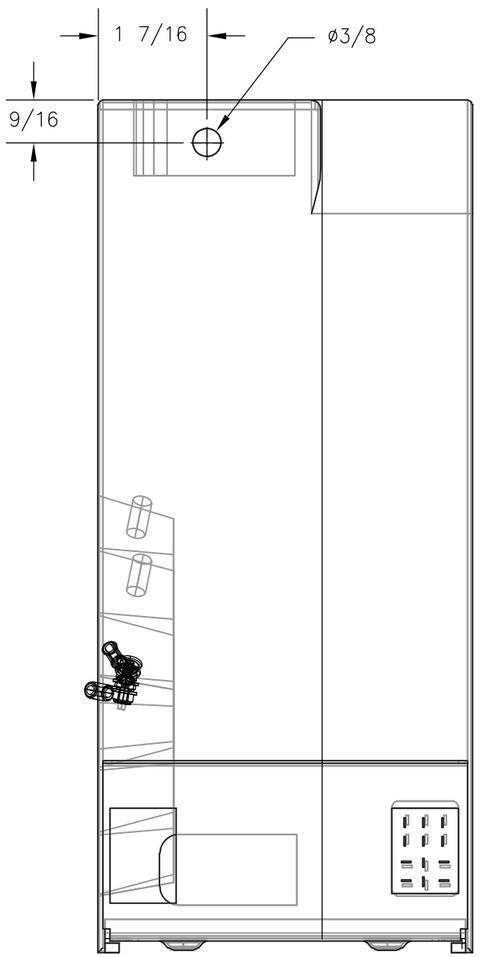

BACK VIEW

LTR	ECO	DESCRIPTION	BY	DATE	APVD
D	0208–072	REVISED ENGR INFO	WD	3/31/08	RB
C	0404–115	REV NOTE 2 AND TERMINAL WIRING	AM	5/19/04	RB
B	0400–045	REV NOTE 1 & ADDED NOTE 2	LS	4/10/00	MAF
A	0398–021	ADDED NOTE & REV SIDE VIEW	LS	3/6/98	RB
–	1097–272	RELEASED DRAWING	WD	10/20/97	MAF

PRODUCT: AMTT

TOLERANCES UNLESS OTHERWISE SPECIFIED
LOCATIONS: ±1/16
FRACTIONAL HOLES: ±1/32

MATERIAL: HOPPER/STANDARD, UNIVERSAL #22182-000
SCALE NONE | DATE 10/16/97
DRAWN WEDDLE | CHK'D LS/MAF
APVD | DATE
MAF | 10/20/97

1. ALL SPECIFICATIONS SUBJECT TO CHANGE WITHOUT NOTICE.
2. UNLESS OTHERWISE SPECIFIED, ALL DIMENSIONS ARE IN INCHES.

RYKO® MFG. CO. U.S.A.
GRIMES,IOWA 50111

HOPPER/MOD, LOCKABLE, LG COIN

REV. D | DWG. NO. 22182–001

FORM #19477–037 REV B 01/20/97

CHANGER CHUTE ASSY

PART NO. 25912-001 REVISION -

ITEM	QTY.	UOM	PART NO.	DESCRIPTION
1	2	EA	25901-001	CHANGER CHUTE/SIDE
2	18	EA	10604-208	RIVET/AL&STL,.125,.063-.125,BL
3	1	EA	25901-002	CHANGER CHUTE/COIN DROP
4	1	EA	25901-003	CHANGER CHUTE/WRAPPER

NOTE:

1 ASSEMBLE BOTH SIDES (ITEM 1) TO THE WRAPPER (ITEM 4) BEFORE ASSEMBLING THE COIN DROP (ITEM 3) TO THE WRAPPER (ITEM 4).

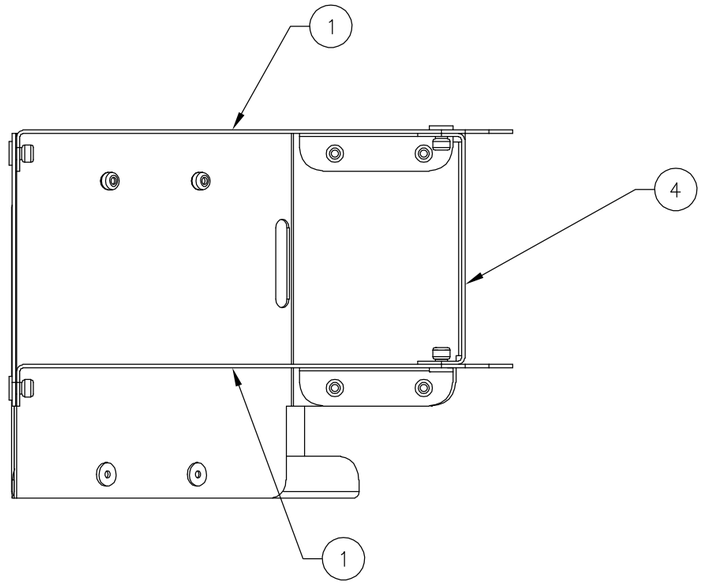

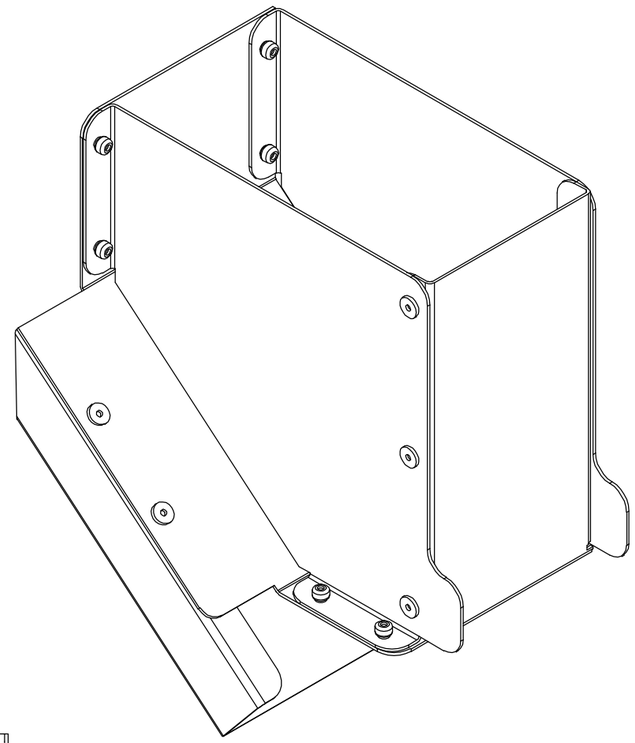

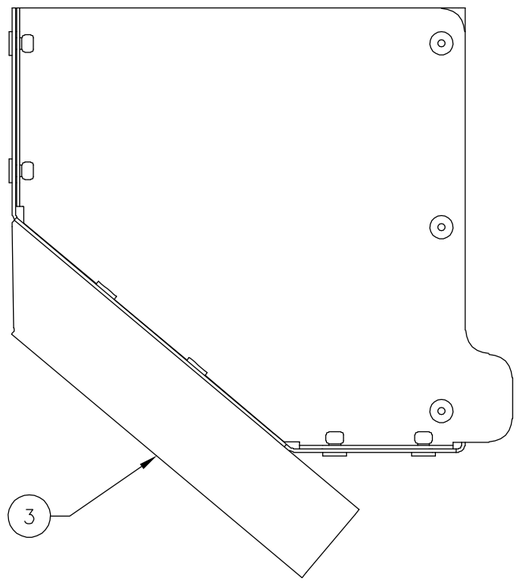

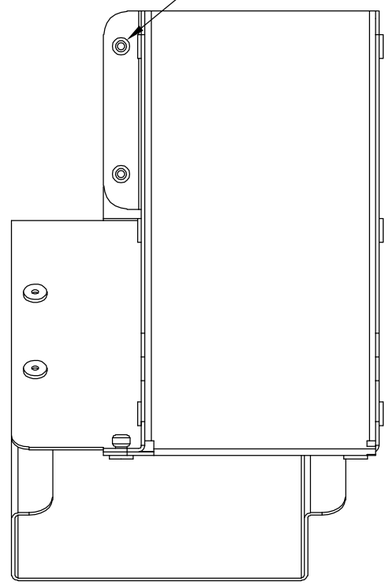

LTR	DESCRIPTION	BY	DATE	APVD
–	0805–063 RELEASED DRAWING	MB	8/30/05	RB

FORM #19477–037 REV B 01/20/97

PRODUCT: AMTT CS

TOLERANCES UNLESS OTHERWISE SPECIFIED

MATERIAL: SEE PRODUCT STRUCTURE

SCALE: NONE | DATE: 8/24/05

DRAWN: BEERENDS | CHK'D: TB/MB

APVD: RB | DATE: 8/30/05

1. ALL SPECIFICATIONS SUBJECT TO CHANGE WITHOUT NOTICE.
2. UNLESS OTHERWISE SPECIFIED, ALL DIMENSIONS ARE IN INCHES.

RYKO® MFG. CO. U.S.A.
GRIMES,IOWA 50111

CHANGER CHUTE ASSY

REV. –

DWG. NO. 25912–001

PRINTER ASSEMBLY

PART NO. 25907-000 REVISION B

ITEM	QTY.	UOM	PART NO.	DESCRIPTION
1	1	EA	25892-000	BRACKET/PRINTER MOUNT
2	1	EA	15421-010	PRINTER/THRML,RS232,W/CONTRLR
3	1	EA	15421-013	PRINTER CABLE/PARALLEL I/F
4	1	EA	25914-003	CABLE ASSY/PRINTER POWER
5	1	EA	22485-001	PAPER HOLDER/PRINTER,2-3/8
6	3	EA	10034-240	SCREW/MACH,#4-40x1/2,RNDH,SS
7	3	EA	13945-001	NUT/ #4-40,NYL INS,SS
8	2	EA	10034-239	SCREW/MACH,#8-32x3/8,RNDH,SS
9	2	EA	13945-003	NUT/ #8-32,NYL INS,SS
10	1	EA	23639-000	LABEL/ESD SENSITIVE,1.5"X.375"
11	1	EA	23185-003	LABEL/PRINTER PAPER RVS ROLL
12	1	EA	10005-203	WIRE TIE/6",1-3/4"MAX DIA
13	1	EA	22550-002	BEZEL WLDT/PRINTER,AMTT CS

NOTES:

1. BEFORE MOUNTING THE PRINTER (ITEM #2) TO THE PRINTER HOLDER PLATE (ITEM #1) CONNECT THE PRINTER POWER CABLE (ITEM #4) HERE. THEN ROUTE THE OTHER END OF THE CABLE THROUGH THE CABLE SLOT. SEE NOTE 3.
2. BEFORE MOUNTING THE PRINTER (ITEM #2) TO THE PRINTER HOLDER PLATE (ITEM #1) CONNECT THE PARALLEL PRINTER CABLE (ITEM #3) HERE. THEN ROUTE THE OTHER END OF THE CABLE THROUGH THE CABLE SLOT. SEE NOTE 3.
3. WITH THE PARALLEL CABLE AND POWER CABLE ROUTED THROUGH THIS CABLE SLOT, MOUNT THE PRINTER (ITEM #2) AND PAPER HOLDER (ITEM #5) TO THE PRINTER HOLDER PLATE (ITEM #1).
4. LOOP THE CABLES AND USE A WIRE TIE (ITEM #12) TO HOLD THE CABLE LOOP AND SECURE THE LOOP TO THE PRINTER HOLDER PLATE THOUGH ONE OF THE MOUNTING HOLES.
5. ADJUST THE PAPER HOLDER (ITEM #5) AND THE PAPER BEZEL (ITEM #13) SO THAT THE CENTERLINE OF EACH LINES UP WITH THE CENTERLINE OF THE PRINTER CUTTER BEFORE TIGHTENING SCREWS AND NUTS.

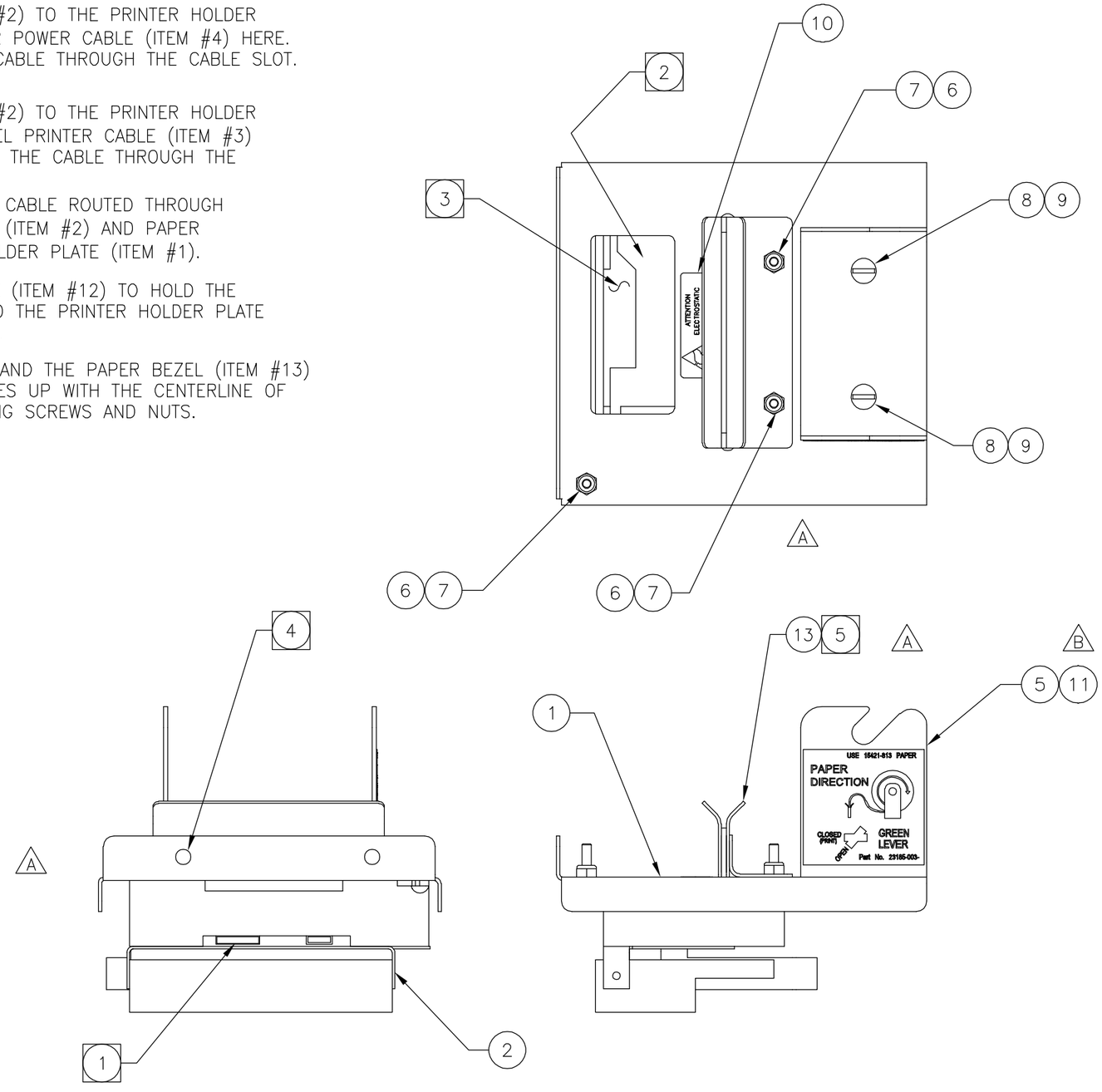

LTR	ECO	DESCRIPTION	BY	DATE	APVD
B	0506-098	REVISED LABEL, ITEM #11	KS	6/7/06	RB
A	0404-051	REP ITEM 8;ADD ITEM 13&NOTE 5	MS	4/21/04	RB
–	1203-023	RELEASED DRAWING	LE	1/13/04	RB

FORM #19477-037 REV B 01/20/97

PRODUCT: AMTT CS

TOLERANCES UNLESS OTHERWISE SPECIFIED

1. ALL SPECIFICATIONS SUBJECT TO CHANGE WITHOUT NOTICE.
2. UNLESS OTHERWISE SPECIFIED, ALL DIMENSIONS ARE IN INCHES.

MATERIAL: SEE PRODUCT STRUCTURE

SCALE: NONE | DATE: 12/08/03
DRAWN: LE | CHK'D: AM/MB
APVD: RB | DATE: 1/13/04

RYKO® MFG. CO. U.S.A.
GRIMES,IOWA 50111

PRINTER ASSEMBLY

REV. B | DWG. NO. 25907-000

DOOR ASSY/AMTT CS

PART NO. 25913-000 REVISION F

ITEM	QTY.	UOM	PART NO.	DESCRIPTION
1	1	EA	25876-000	FACE PLATE/CB,AMTT CS
2	1	EA	25875-000	BEZEL/UHMW,AMTT CS
3	1	EA	25834-000	TUBE WLDT/DOOR LOCK,COIN BOX
4	6	EA	10034-251	SCREW/MACH,#10-32x3/8,SLHWH,SS
5	2	EA	10427-206	SCREW/SKT HD CAP,1/2-13X1-1/4
6	2	EA	12971-005	WASHER/DISH,BONDED NEO,1/2
7	1	EA	13864-001	SPEAKER/8 OHM,4" SQUARE
8	4	EA	10034-277	SCREW/MACH,#8-32X1/4,SLHWH,SS
9	1	EA	25941-000	WINDOW PLUG/SNAP,CLEAR,5/8"
10	1	EA	25940-000	CLIP/TENSION,BLACK
11	1	EA	13708-002	STANDOFF/.25"ODx.125LG,NYLON
12	1	EA	10034-274	SCREW/MACH,#6-32X3/8,SLHWH,SS
13	1	EA	25919-004	DISPLAY ASSY/12.1" W/HEATERS
14	5	EA	10034-281	SCREW/MACH,#8-32X1-1/2,SLHWH
15	0	FT	14181-000	TUBING/HEAT SHRINK,3/16" OD
16	1	EA	10455-201	SEALANT/SILICONE,CLEAR,TUBE
17	1	EA	25914-011	CABLE ASSY/BACKLIGHT INVERTER
18	1	EA	15483-003	MOUNTING PAD/CABLE,ADHESIVE
19	1	EA	10005-201	WIRE TIE/4",5/8"MAX DIA

NOTES:

1. STEPS FOR ADHERING THE UHMW BEZEL (ITEM #2) AND TOUCHSCREEN TO THE FACE PLATE (ITEM #1). REMOVE THE TOUCHSCREEN FROM THE DISPLAY ASSEMBLY BOX (ITEM #13). OPEN THE TOUCHSCREEN PACKAGING AND LOG THE SERIAL NUMBER FROM THE TOUCHSCREEN ON THE DISC. BEFORE ADHERING DRY FIT THE PARTS TOGETHER TO ENSURE PROPER FIT. IF NEEDED TRIM EXTRA ADHESIVE FROM EDGES OF TOUCHSCREEN. REMOVE THE PROTECTIVE FILM FROM THE FRONT SIDE OF THE TOUCHSCREEN GLASS.
   1. APPLY A CONTINUOUS 1/4" BEAD (MINIMUM) OF SILICONE SEALANT (ITEM #16) BETWEEN THE FACE PLATE (ITEM #1) AND THE BEZEL (ITEM #2) AND BETWEEN THE BEZEL (ITEM #2) AND THE TOUCHSCREEN (PART OF ITEM #13).
   2. APPLY WEIGHT OR CLAMPS TO SEAT THE BEZEL AND TOUCHSCREEN. TO ADHERE PROPERLY A SMALL AMOUNT OF SILICONE SHOULD SQUEEZE OUT ALL EDGES.
   3. THESE PARTS MUST LAY FLAT TO DRY FOR A MINIMUM OF 24 HOURS.
   4. USE A SHARP KNIFE TO REMOVE EXTRA ADHESIVE FROM THE ASSEMBLY.

2. AFTER THE ASSEMBLY OF NOTE #1 IS COMPLETE, ANY BLANKING PLATE OPTIONS ARE INSTALLED AND THE WINDOW PLUG (ITEM #9) IS INSTALLED, BUT BEFORE INSTALLING ANY OTHER PARTS. INSTALL THE LAMINATE OPTION TO THE FRONT OF THE DOOR. TRIM EDGES IF REQUIRED ON ANY OPENINGS AND OUTSIDE EDGES USING A SHARP KNIFE.

3. INSTALL SPEAKER ORIENTATED AS SHOWN BEFORE INSTALLING THE DISPLAY ASSEMBLY. AFTER DISPLAY ASSEMBLY IS INSTALLED CONNECT SPEAKER WIRES FROM THE DISPLAY ASSEMBLY.

4. APPLY HEAT SHRINK TUBING (ITEM #15) TO SCREW (ITEM #14) BEFORE FASTENING THE DISPLAY.

5. ROUTE THE TOUCHSCREEN CABLE THROUGH GROMMET. CONNECT THE TOUCHSCREEN CABLE TO THE TOUCHSCREEN CONTROLLER BOARD ON THIS SIDE OF THE DISPLAY ASSEMBLY.

6. ATTACH LIGHT SENSOR FROM THE DISPLAY ASSEMBLY (ITEM #13) ON THE WINDOW AND UNDER THE CLIP. THEN PLACE ADHESIVE MOUNT PAD (ITEM #18) UNDER THE LIGHT SENSOR AND SECURE WITH WIRE TIE (ITEM #19) TO PREVENT LIGHT SENSOR FROM ROTATING AND SO THAT THE SENSOR WILL NOT HIT THE LOWER LIP OF BOTTOM PORTION OF COINBOX HEAD. MINIMUM CLEARANCE FROM LIGHT SENSOR TO BOTTOM OF DOOR IS 0.75". (C) (E)

7. ROUTE THE CABLES AND WIRES FROM THE DOOR ASSEMBLY AND THE OPTIONS MOUNTED TO THE DOOR ALONG THIS PATH. BETWEEN THE FAN AND THE SPEAKER, THEN UNDER THE BILL ACCEPTOR IF PRESENT, AND THEN ABOVE THE CARD READER IF PRESENT.

8. (D) REMOVE ANY PROTECTIVE FILM FROM THE TOUCHSCREEN AND THE DISPLAY BEFORE ASSEMBLING THE DISPLAY ASSEMBLY (ITEM #13) TO THE DOOR. INSURE THAT ALL GLASS IS CLEAN BEFORE ASSEMBLY.

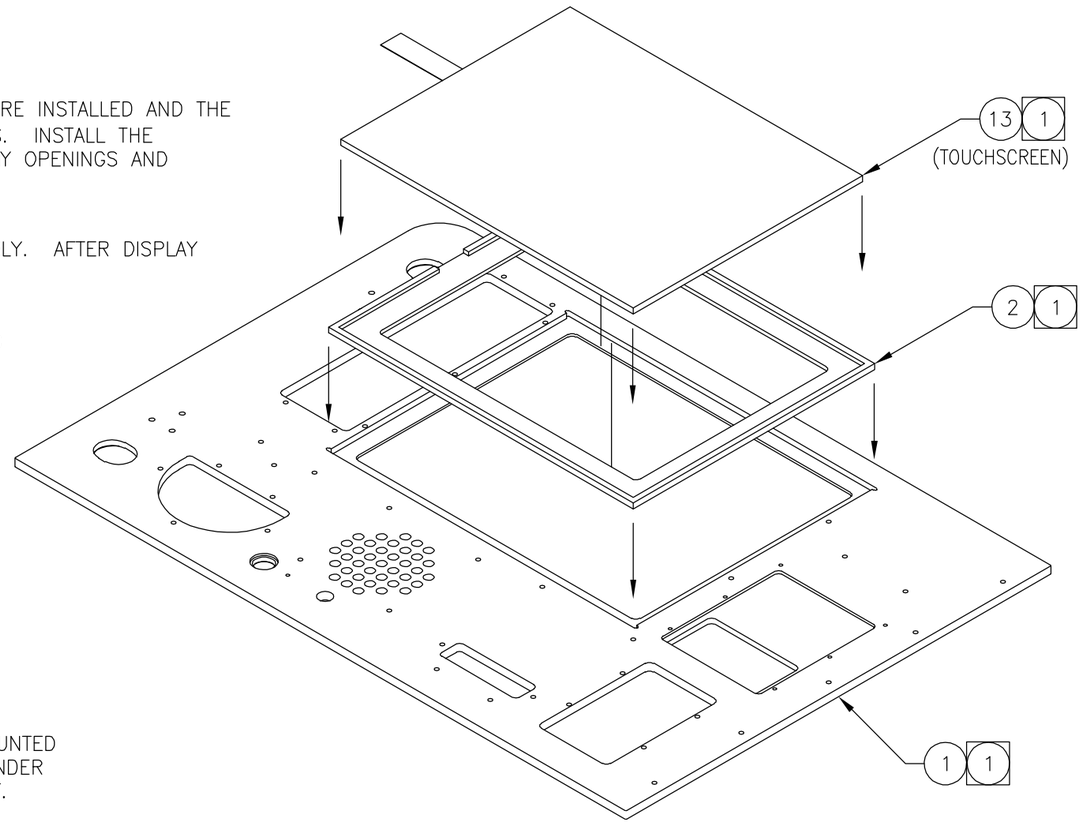

LTR	QTY	PART NO.	DESCRIPTION	BY	DATE	APVD
F		0708-008	REP ITEM 13	WD	7/3/08	RB
E		0208-002	REV NOTE 6	WD	2/1/08	RB
D		1107-094	ADD NOTE #8	TB	11/20/07	RB
C		0805-117	REPLACED DISPLAY ASSEMBLY	MB	8/30/05	RB
B		0305-104	REVISED NOTE #1	MB	3/21/05	RB
A		0105-008	REFER TO OTHER SHEET	MB	1/24/05	RB
–		0104-047	RELEASING DRAWING	MB	2/2/04	RB

PRODUCT: AMTT CS

TOLERANCES UNLESS OTHERWISE SPECIFIED

MATERIAL: SEE PRODUCT STRUCTURE

SCALE NONE | DATE 1/23/04
DRAWN BEERENDS | CHK'D KC/RB
APVD | DATE 2/2/04
RB

1. ALL SPECIFICATIONS SUBJECT TO CHANGE WITHOUT NOTICE.
2. UNLESS OTHERWISE SPECIFIED, ALL DIMENSIONS ARE IN INCHES.

RYKO® MFG. CO. U.S.A.
GRIMES,IOWA 50111

DOOR ASSY/ AMTT CS

REV. F | DWG. NO. 25913-000

SHEET 1 OF 2

FORM #19477-037 REV B 01/20/97

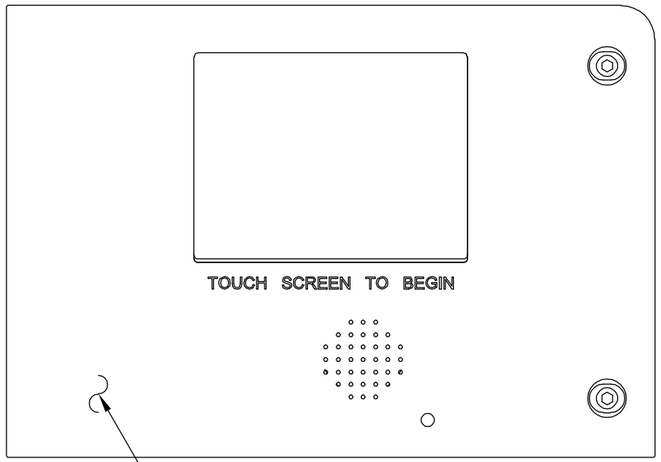

FRONT VIEW

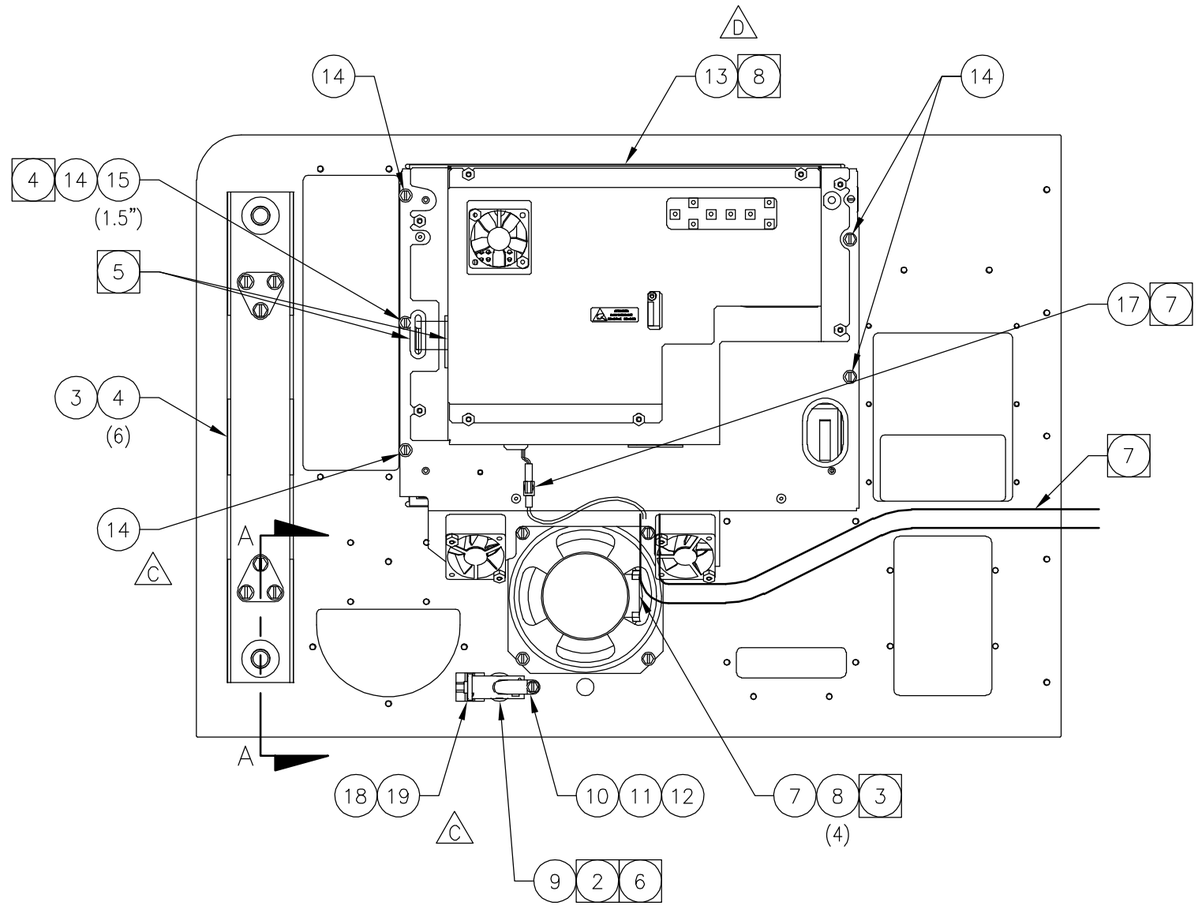

BACK VIEW

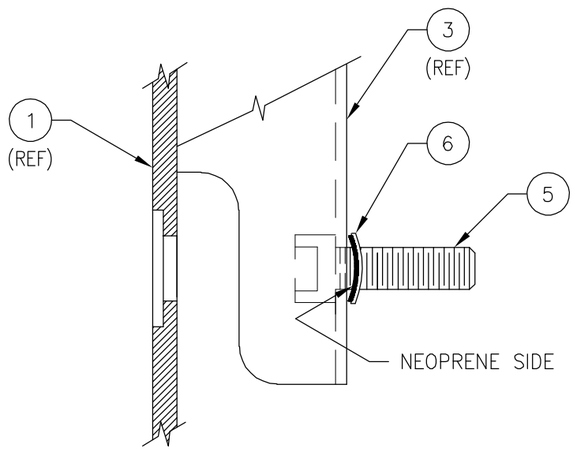

SECTION A–A
(ENLARGED FOR CLARITY)
(TYPICAL BOTH ENDS)

FORM #19477–114 REV – 4/14/08

SHEET 2 OF 2

RYKO® MFG. CO. U.S.A.
GRIMES,IOWA 50111

DOOR ASSY/
AMTT CS

MATERIAL SEE PRODUCT STRUCTURE

SCALE NONE | DATE 1/23/04
DRAWN BEERENDS | CHK'D KC/RB
APVD RB | DATE 2/2/04

REV. F | DWG. NO. 25913–000

PANEL ASSY/AMTT CS

PART NO. 25910-000 REVISION N

ITEM	QTY.	UOM	PART NO.	DESCRIPTION
1	1	EA	25909-002	PC CHASSIS ASSY/AMTT CS,1.2
2	1	EA	25891-000	PANEL/ELEC,AMTT CS
3	37	EA	16679-004	NUT/RIVET,AL,#6-32,.075 GRIP
4	1	EA	25894-000	BRACKET/PC CHASSIS
5	1	EA	22184-005	POWER SUPPLY/24VDC,60 WATT
6	1	EA	22184-003	POWER SUPPLY/ATX,330 WATT,PC
7	6	EA	16679-003	NUT/RIVET,AL,#10-24,.130 GRIP
8	45	EA	10034-275	SCREW/MACH,#6-32X1/2,SLHWH,SS
9	1	EA	15477-009	COIN BOX INTFC ASSY/AMTT CS
10	1	EA	21151-001	LABEL/"Z" FILTER ID,Z1-Z10
11	1	EA	19642-000	POWER LINE FILTER/2.5A,250V
12	1	EA	11221-207	RELAY BASE/11 PIN CIRCULAR
14	1	EA	25895-000	BRACKET/PHOTOEYE RELAY
15	1	EA	10160-219	CIRCUIT BREAKER/5A,1POLE
17	1	EA	13620-001	SHOP PROC/PACKAGING OF ESD DEV
18	1	EA	25897-000	PLATE/MOUNT,POWER SUPPLY
19	2	EA	12959-007	RELAY/MINI,DPDT,3A CONT,24VDC
20	2	EA	12960-005	RELAY BASE/2P,BLADE,TRK MT
21	1	EA	12970-008	SPRING/RELAY HOLD DOWN,PE MDL
22	1	EA	12703-037	PHOTOELEC RELAY/2WTD,24VDC
23	2	FT	15107-000	TUBING/HEAT SHRINK,1/4" OD
24	2	EA	19573-006	SCREW/MACH,M3X4,PH
25	2	EA	10609-218	HEATER/PAD,50W,120V,2"X5",UL
26	2	EA	21648-006	BRACKET/SMART CARD RDR,HTR,BOT
27	4	EA	13945-002	NUT/ #6-32,NYL INS,SS
28	1	EA	10145-240	TERMINAL BLOCK END CLAMP
29	13	EA	10145-279	TERMINAL BLOCK/1 POLE
30	2	EA	10145-285	TERMINAL BLOCK/GND,SCREW TERM
31	8	EA	10145-266	TERMINAL BLOCK JUMPER BAR
32	0	EA	10145-262	TERMINAL MARKER/100 BLANK
33	1	EA	20092-001	LABEL/"X" TERM BLK ID,X1-X10
34	1	EA	20085-001	LABEL/"A" ASSEMBLY ID,A1-A10
35	2	EA	12053-002	LABEL/GROUND,"PE"
36	45	FT	17276-004	WIRE/STRD,INTL,0.75SQMM DK BLU
37	5	FT	17276-005	WIRE/STRD,INTL,0.75SQMM,GRN/YE

PANEL ASSY/AMTT CS

PART NO. 25910-000 REVISION N

ITEM	QTY.	UOM	PART NO.	DESCRIPTION
38	25	FT	10279-290	WIRE/STRANDED,18GA,300V,BLACK
39	6	FT	17638-001	WIRE/STRD,INTL,1.5SQ MM,BROWN
40	6	FT	17638-002	WIRE/STRD,INTL,1.5SQMM,LT BLUE
41	1	EA	20065-001	LABEL/CAUTION,ELEC SHOCK,1.5"
42	0	EA	12995-000	TRACK/RELAY MOUNTING
43	20	EA	10005-201	WIRE TIE/4",5/8"MAX DIA
44	1	EA	10287-000	CONNECTOR HOUSING/SOCKET,8 CKT
45	2	FT	12703-050	CABLE/SHIELDED,GRAY
46	2	FT	12703-051	CABLE/SHIELDED,BLACK
47	1	EA	17912-000	SHOP PROC/SHIELDED CABLE ENDS
48	0	FT	11153-200	TUBING/HEAT SHRINK,1/8" OD
49	8	EA	10289-000	CONNECTOR/SOCKET,20-14GA
50	7	EA	10495-201	TERMINAL/RCPT,SLIP,22-18G,RED
51	2	EA	10744-214	GROMMET/INSUL,5/16x1/2x1/16
52	1	EA	12822-000	LABEL/"120 VOLT"
53	1	EA	14344-001	LABEL/"K" RELAY ID,K1-K10
54	1	EA	12159-017	LABEL/CAUTION,REMOVE POWER
56	1	EA	10744-206	GROMMET/INSUL,3/4x7/8x3/32
58	1	EA	25914-007	CABLE ASSY/SCSI II,LOCKING
59	1	EA	25894-100	BRACKET/PC MOUNT,RIGHT
60	1	EA	25894-101	BRACKET/PC MOUNT,LEFT
61	1	EA	25602-001	MDB CABLE HARNESS/AMTT CS
62	3	EA	11488-211	CLAMP/CABLE,3/4"DIA,BLK NYLON
63	10	EA	10145-275	TERMINAL BLOCK/SPRING,4 COND.
64	1	EA	10145-274	TERMINAL BLOCK END PLATE/4COND
65	1	EA	13697-306	CONNECTOR/RCPT,4CKT,.062,INLIN
66	1	EA	25899-000	BRACKET/CONNECTOR HOLDER
67	1	EA	25883-000	LABEL/CONNECTOR BRACKET
68	1	EA	22428-020	CABLE ASSEMBLY/LCD TEMP SENSOR
69	10	EA	13697-297	CONNECTOR/SOCKET,FEMALE,.062
70	4	EA	13697-304	CONNECTOR/RCPT,2CKT,.062
71	1	EA	26050-002	CABLE ASSY/CONN BRKT,PRINTER
72	1	EA	26050-000	CABLE ASSY/CONN BRKT,DSPL&SPKR
73	1	EA	26050-003	CABLE ASSY/CONN BRKT,BACKLIGHT
74	1	EA	26050-001	CABLE ASSY/CONN BRKT,CARD MECH

PANEL ASSY/AMTT CS

PART NO. 25910-000 REVISION N

ITEM	QTY.	UOM	PART NO.	DESCRIPTION
75	1	EA	26050-006	CABLE ASSY/ATX TO COMMON
76	2	EA	10744-218	GROMMET/INSUL,1.000X1.375X.063
77	2	EA	10878-201	NUT/ #4-40,NYL INS,ZN PL
78	1	EA	24517-001	PATCH CORD/STEREO,3.5MM,3.5MM
79	2	EA	10039-222	SCREW/MACH,#4-40x1-1/4,PH,SS
80	1	EA	20080-001	LABEL/"Q" CKT PTCTR ID,Q1-Q10
81	40	FT	10279-294	WIRE/STRANDED,18GA,300V,ORANGE
82	4	EA	15481-002	NUT/NYLON HEX,#6-32
83	0	EA	10145-241	TERMINAL MARKER/BLANK
84	4	EA	13070-020	STANDOFF/AL,HEX,6-32x1/2LG,M-F
85	4	EA	10034-273	SCREW/MACH,#6-32X1/4,SLHWH,SS
86	2	EA	11175-203	DIODE/SILICON,1AMP,100PRV
92	2	EA	11488-217	CLAMP/CABLE,1-1/4DIA,BLK NYLON
94	4	EA	15483-003	MOUNTING PAD/CABLE,ADHESIVE
95	1	EA	21869-025	INSULATION/FOAM,AMTT,CORNER ST
96	2	EA	26630-000	TAG/SHUT DOWN PROCEDURE PC
97	1	EA	27607-000	THERMOSTAT/40F CLOSE,60F OPEN

NOTES:

1. INSTALL RIVET NUTS (ITEMS #3 AND #7) INTO THE PANEL, CONNECTOR HOLDER AND CHASSIS HOLDER (ITEMS #2, #66 AND #4). REFER TO THE RIVET NUT INSTALL DETAIL FOR LOCATIONS.

2. INSTALL THE POWER LINE FILTER "Z1" (ITEM #11) REFER TO DETAIL D. ROUTE THE WIRES THROUGH THE SMALL GROMMET (ITEM #56) IN THE RIGHT SIDE THE PC CHASSIS HOLDER BRACKET (ITEM #4). THE WIRES FROM THE RIGHT SIDE OF THE LINE FILTER ARE ROUTED TO "K1" RELAY (ITEM #20). CONNECT WIRE TO #790 TO TERMINAL 12, AND WIRE #799 TO TERMINAL 9 ON THE "K1" RELAY. THE WIRES FROM THE LEFT SIDE OF THE LINE FILTER ARE ROUTED TO THE TOP OF X2. CONNECT WIRE #90 TO TERMINAL 90, WIRE #99 TO THE "Q1" CIRCUIT BREAKER, AND THE GROUND WIRE TO THE RIGHT PE TERMINAL.

3. ATTACH "A" LABELS (ITEM #34) TO THESE COMPONENTS.
   - A1 PC CHASSIS
   - A2 I/O MODULE
   - A3 PC POWER SUPPLY
   - A4 PRINTER POWER SUPPLY
   - A5 24 VDC POWER SUPPLY

4. CONNECT THE CABLE ASSEMBLIES (ITEMS 72 THRU 75) TO THE PC POWER SUPPLY. WIRE TIE THE OTHER CABLES FROM THE PC POWER SUPPLY UNDER THE PC CHASSIS BRACKET AND BEHIND THE PC POWER SUPPLY.

5. MOUNT THE PC CHASSIS HOLDER BRACKET (ITEM #4) USING THE #6 SCREWS (ITEM #8) AFTER ROUTING ALL WIRE THROUGH THE APPROPRIATE GROMMET.

6. MOUNT THE PC POWER SUPPLY (ITEM #6) USING #6 SCREWS (ITEM #8). RETAIN THE POWER CORD FOR LATER INSTALLATION.

7. ROUTE THE CABLES FROM THE POWER SUPPLY FROM NOTE #4 THROUGH THE LARGE GROMMET (ITEM #76) IN THE LEFT SIDE OF THE BRACKET (ITEM #4) AND PLUG IN THE WIRES INTO THE PROPER CONNECTOR, REFER TO DETAIL H AND WIRING CHARTS ON SHEETS 8 AND 9.

8. ROUTE THE GREEN/YELLOW WIRE FROM THE POWER SUPPLY (ITEM #5) TO THE TOP OF THE LEFT GROUND "PE" OF X2.

9. ROUTE THE HEATER WIRES THROUGH THE GROMMETS (ITEM #51). FROM THE TOP SIDE OF PANEL SOLDER THE HEATERS IN PARALLEL TO WIRE #797 (ITEM #39) AND WIRE #798 (ITEM #40). COVER THE SOLDERED CONNECTION WITH HEAT SHRINK TUBING (ITEM #23). ROUTE THE LITE BLUE AND BROWN WIRES FROM THE HEATER PADS (ITEM #25) TO THE TOP SIDE OF THE "K1" RELAY BASE (ITEM #20).

10. ATTACH THE APPROPRIATE "CN" LABELS TO EACH CONNECTOR PLUGGED INTO THE CHASSIS ASSEMBLY. AFTER LABELS ARE ADDED TO ASSEMBLY, TAPE THE REMAINDER OF THE LABELS FACE DOWN TO THE TOP OF THE CHASSIS COVER FOR FUTURE ASSEMBLY.

11. MOUNT THE CONNECTORS TO THE BRACKET/CONNECTOR HOLDER (ITEM #66), REFER TO DETAIL H FOR LOCATIONS AND ORIENTATION. REFER TO THE WIRING CHART ON SHEETS 8 AND 9 FOR THE OTHER CONNECTION POINT FOR THE CABLES. ROUTE CABLES WITH OTHER CABLES PRESENT.

12. MOUNT THE 6 SOCKET CONNECTOR "JP6" TO BRACKET/CONNECTOR HOLDER (ITEM #66), REFER TO DETAIL H FOR LOCATION AND ORIENTATION. THEN MOUNT CABLE & BOARD ASSY/BILL ACCEPTOR,MARS (ITEM #61) TO THE SIDE OF THE CPU CHASSIS HOLDER (ITEM #4). ATTACH THE "CN9" LABEL TO THE DB-9 CONNECTOR, REFER TO NOTE 10. CONNECT THE DB-9 CONNECTOR TO A1-CN9, ROUTE CABLES WITH OTHER CABLES PRESENT. ROUTE AND CONNECT 725 TO X1 AND 767 TO K2-1.

13. PLUG THE CABLE ASSY (ITEM #75) 4 PIN CONNECTOR INTO ONE OF THE A3 4 PIN CONNECTOR. ROUTE CABLE ASSY (ITEM #75) WITH OTHER WIRES TO X1 725 TERMINALS. ⚠1 PLUG THE 20 PIN CONNECTOR FROM A3 INTO A1-CN12. ATTACH THE "CN12" LABEL TO THE CONNECTOR, REFER TO NOTE 10.

14. ROUTE WIRES AND CABLES FROM 725(2), 732, 746, AND GREY AND BLACK PHOTOEYE CABLES THE PHOTOELECTRIC RELAY THROUGH THE LARGE GROMMET (ITEM #76) ON THE RIGHT SIDE OF THE CPU HOLDER (ITEM #4) AND OUT THE FRONT OF THE CPU HOLDER (ITEM #4) THROUGH THE CABLE CLAMP (ITEM #62). THEN WIRE THE 8 SOCKET CONNECTOR "JP8" (ITEM #44), FOR USE DURING FUTURE ASSEMBLY.

15. ROUTE WIRES TO THE RIGHT SIDE OF THE PANEL ASSEMBLY UNDER THE 24 VDC POWER SUPPLY (ITEM #5). TWIST WIRES A MINIMUM OF 3 TURNS PER INCH. CONNECT WIRES TO THE 2 SOCKET CONNECTOR "JP9". LOOP THE TWISTED WIRE AND WIRE TIE (ITEM #43) FOR USE DURING FUTURE ASSEMBLY.

16. CONNECT THE AUDIO BETWEEN "A1" PC CHASSIS ASSEMBLY (ITEM #1) AND "A2" ENCLOSE ASSY/PC INTERFACE (ITEM #9) USING THE STEREO PATCH CORD (ITEM #78). CONNECT CORD TO A2 AUDIO IN ROUTE UP TOP OF A1 WITH OTHER WIRES, DOWN THE BACK OF THE PANEL THROUGH THE CABLE CLAMPS, THROUGH LARGE GROMMET IN BOTH THE RIGHT AND THEN LEFT SIDES OF PC HOLDER (ITEM #4), UP THROUGH BOTH CABLE CLAMPS ON TOP OF PC HOLDER (ITEM #4), AND CONNECT TO A1-CN15.

17. CONNECT THE SCSI CABLE (ITEM #58) BETWEEN "A1" PC CHASSIS ASSEMBLY (ITEM #1) AND "A2" ENCLOSE ASSY/PC INTERFACE (ITEM #9). CONNECT CABLE TO A2 SCSI PORT AND CONNECT TO A1-CN4.

18. WIRES #725 AND #770 ARE FOR THE EXHAUST FAN LOCATED IN THE BACK OF THE AMTT CS HEAD ASSEMBLY. CONNECT ONE END OF WIRE #770 TO A2-TB4-P3 AND CONNECT THE OTHER END TO CONNECTOR JP12-P1(ITEM #70). CONNECT ONE END OF WIRE #725 TO X1 AND CONNECT THE OTHER END TO CONNECTOR JP12-P2 (ITEM #70). REFER TO DETAIL K. ROUTE BOTH WIRES DIRECTLY TO THE AREA BEHIND THE PHOTO EYE RELAY.

19. SEE SHOP PROCEDURE (ITEM #47) FOR DETAILS ON TERMINATING THE ENDS OF THE SHIELDED CABLE.

20. TWIST WIRES A MINIMUM OF 3 TURNS PER INCH.

21. USE THE POWER CABLE SUPPLIED WITH THE PC POWER SUPPLY "A3" (ITEM #6) TO CONNECT IT TO THE 24VDC POWER SUPPLY "A5" (ITEM #5). CUT THE 3 PRONG PLUG OFF AND STRIP BACK THE CABLE TO USE THE 3 WIRES. REFER TO THE WIRE CHART ON SHEET 9 FOR CONNECTIONS TO THE "A5" 24VDC POWER SUPPLY.

LTR	ECO	DESCRIPTION	BY	DATE	APVD
N	1207-094	ADD THERMOSTAT (ITEM #97)	TB	12/28/07	RB

FORM #19477-037 REV B 01/20/97

PRODUCT
AMTT CS

TOLERANCES
UNLESS OTHERWISE SPECIFIED

1. ALL SPECIFICATIONS SUBJECT TO CHANGE WITHOUT NOTICE.
2. UNLESS OTHERWISE SPECIFIED, ALL DIMENSIONS ARE IN INCHES.

MATERIAL SEE PRODUCT STRUCTURE

SCALE	DATE
NONE	12/29/03
DRAWN	CHK'D
LE	DC/MB
APVD	DATE
RB	2/2/04

SHEET 1 OF 8

RYKO® MFG. CO. U.S.A.
GRIMES,IOWA 50111

PANEL ASSY/
AMTT CS

REV. N
DWG. NO. 25910-000

NOTES:

(23) SET ALL 3 DIALS TO 2 MARKS CLOCKWISE.

(24) REMOVE COVER TO SET SWITCH.
SET DIP SWITCH TO:
SWITCH 1 = ON
SWITCH 2 = OFF

(25) WHEN MOUNTING USE SCREWS ON PCB ASSEMBLY AND NUTS ON BRACKET END. CONNECT 3 PIN CONNECTOR OF PRINTER POWER SUPPLY (ITEM #71) TO CONNECTOR BRACKET REFER TO DETAIL H. TAKE ONE POWER 4 PIN CONNECTOR FROM PC POWER SUPPLY (ITEM #6) AND CONNECT TO J2 OF PCB ASSEMBLY.

(26) MOUNT THE 4 SOCKET SQUARE CONNECTOR "JP7" TO BRACKET/CONNECTOR HOLDER (ITEM #66), REFER TO DETAIL H FOR LOCATION AND ORIENTATION. ATTACH THE "CN8" LABEL TO THE DB-9 CONNECTOR, REFER TO NOTE 10. CONNECT THE DB-9 CONNECTOR TO A1-CN8, ROUTE CABLE WITH OTHER CABLES PRESENT. ROUTE AND CONNECT 725 TO X1 AND 767 TO K2-1. CONNECT THE 4 PIN RECTANGULAR CONNECTOR TO THE MATING CONNECTOR ON A3 POWER SUPPLY. ROUTE WIRES #766 & #726 WITH OTHER CABLES TO K2 RELAY ATTACH WIRE 726 TO K2-P12 AND WIRE 766 TO K2-P4.

(27) LOOSELY ATTACH EACH TAG (ITEM #96) TO AN ADHESIVE MOUNT PAD (ITEM #94) WITH A WIRE TIE (ITEM #43). ATTACH ONE TO THE TOP OF THE CIRCUIT BREAKER (ITEM #15), REFER TO VIEW B-B AND VIEW C-C. PLACE THE OTHER TAG INTO THE INSTALL MANUAL.

(28) THERE IS NO POLARITY, SO WIRES CAN CONNECT TO EITHER SIDE.

N

(29) WIRES SHALL NOT BE ROUTED OVER HEATER AREA.

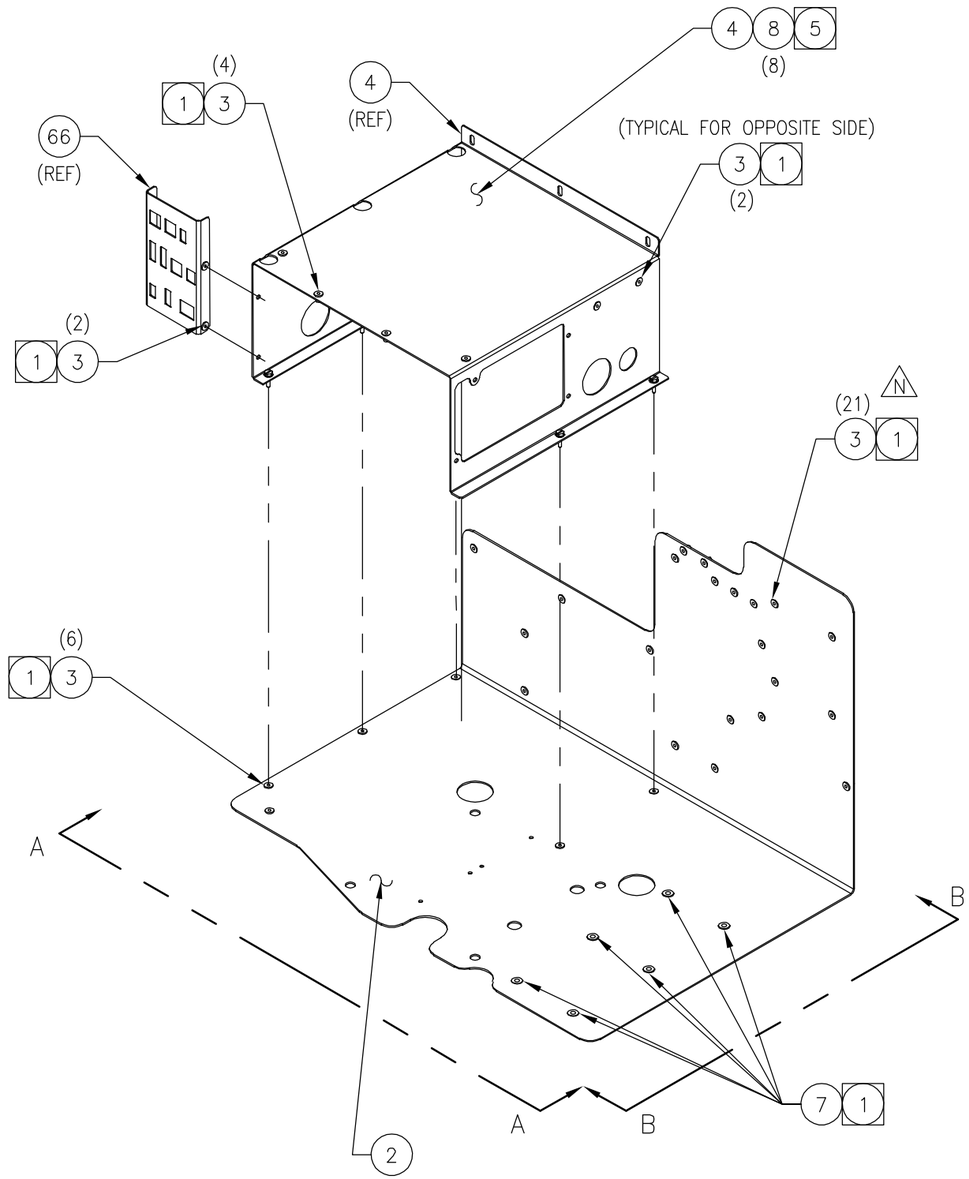

RIVET NUT INSTALL DETAIL

		N	1207-094	ADD THERMOSTAT (ITEM #97)
		LTR	ECO	DESCRIPTION

		TB	12/28/07
		BY	DATE

RB
APVD

FORM #19477-037 REV B 01/20/97

PRODUCT
AMTT CS

TOLERANCES
UNLESS OTHERWISE SPECIFIED

1. ALL SPECIFICATIONS SUBJECT TO CHANGE WITHOUT NOTICE.
2. UNLESS OTHERWISE SPECIFIED, ALL DIMENSIONS ARE IN INCHES.

MATERIAL
SEE PRODUCT STRUCTURE

SCALE NONE
DRAWN LE
DATE 12/29/03
CHK'D DC/MB
APVD RB
DATE 2/2/04

SHEET 2 OF 8

RYKO® MFG. CO.
GRIMES,IOWA 50111 U.S.A.

PANEL ASSY/
AMTT CS

REV. N
DWG. NO. 25910-000

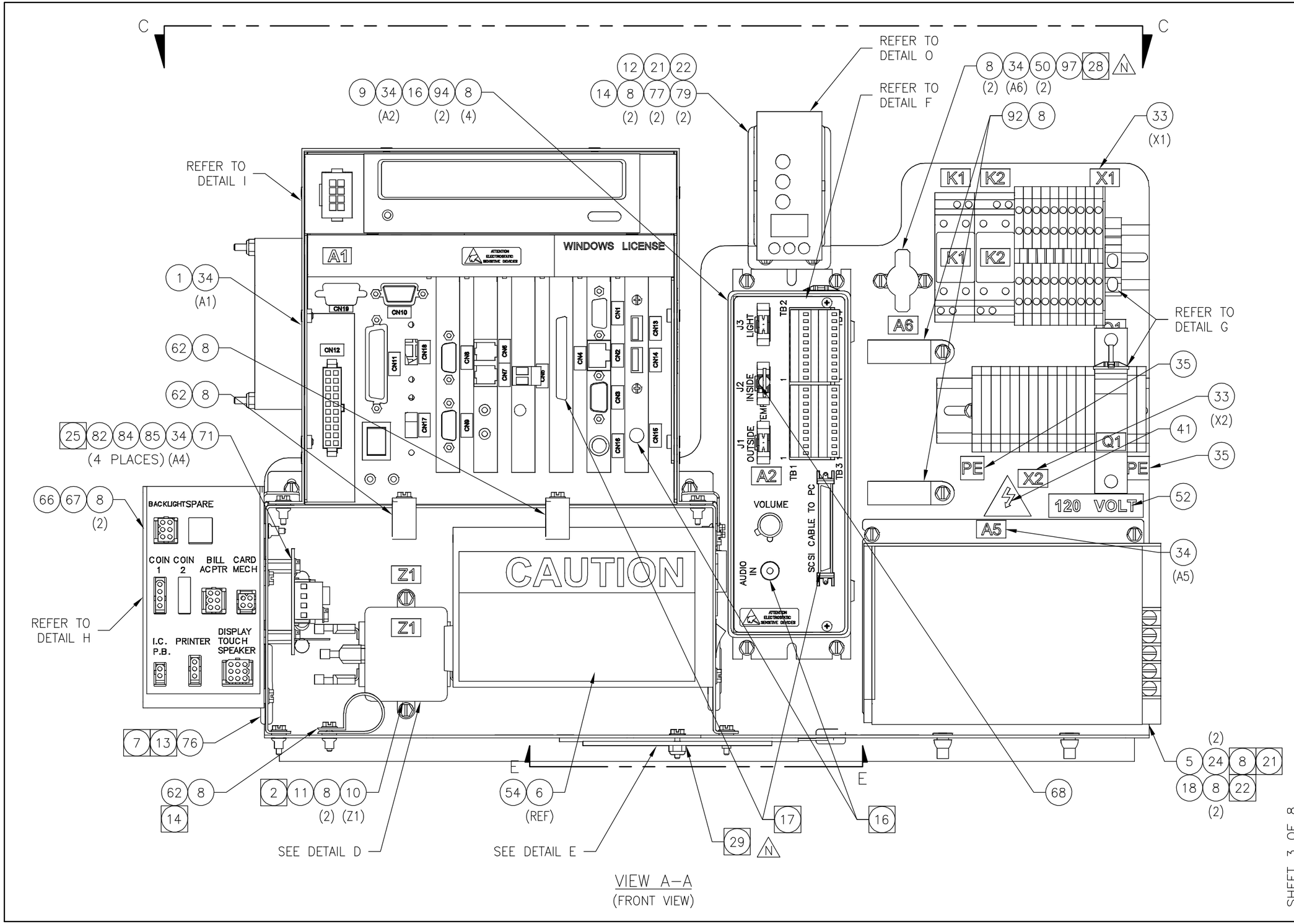

VIEW A–A
(FRONT VIEW)

SHEET 3 OF 8

RYKO® MFG. CO. U.S.A.
GRIMES,IOWA 50111

PANEL ASSY/ AMTT CS

DWG. NO. 25910–000
REV. N

MATERIAL SEE PRODUCT STRUCTURE
SCALE NONE
DRAWN LE
DATE 12/29/03
CHK'D DC/MB
APVD RB
DATE 2/2/04

TOLERANCES: UNLESS OTHERWISE SPECIFIED

1. ALL SPECIFICATIONS SUBJECT TO CHANGE WITHOUT NOTICE.
2. UNLESS OTHERWISE SPECIFIED, ALL DIMENSIONS ARE IN INCHES.

PRODUCT AMTT CS

LTR	ECO	DESCRIPTION	BY	DATE	APVD
N	1207–094	ADD THERMOSTAT (ITEM #97)	TB	12/28/07	RB

FORM #19477–037 REV B 01/20/97

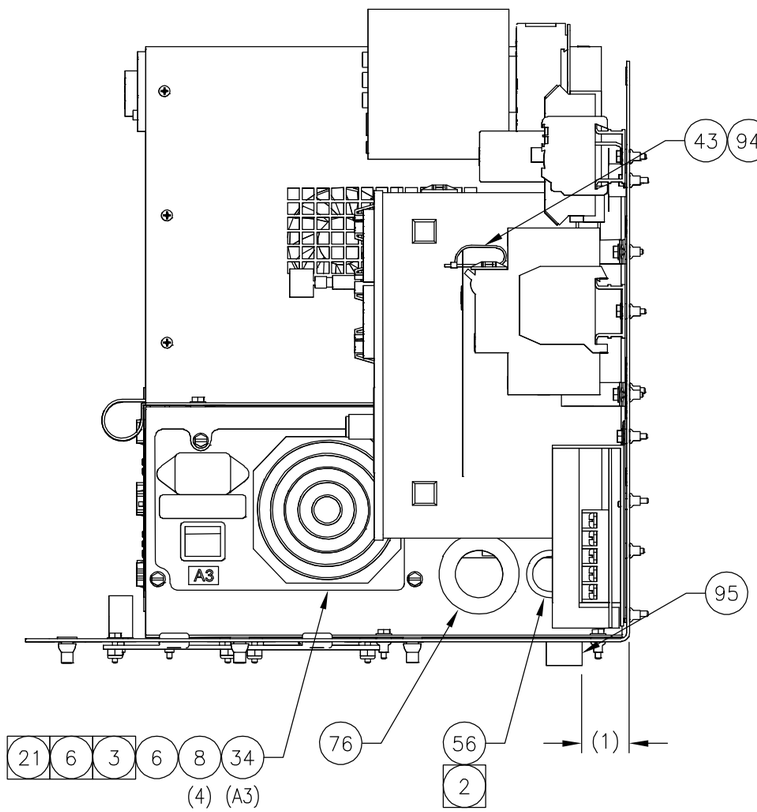

VIEW B–B

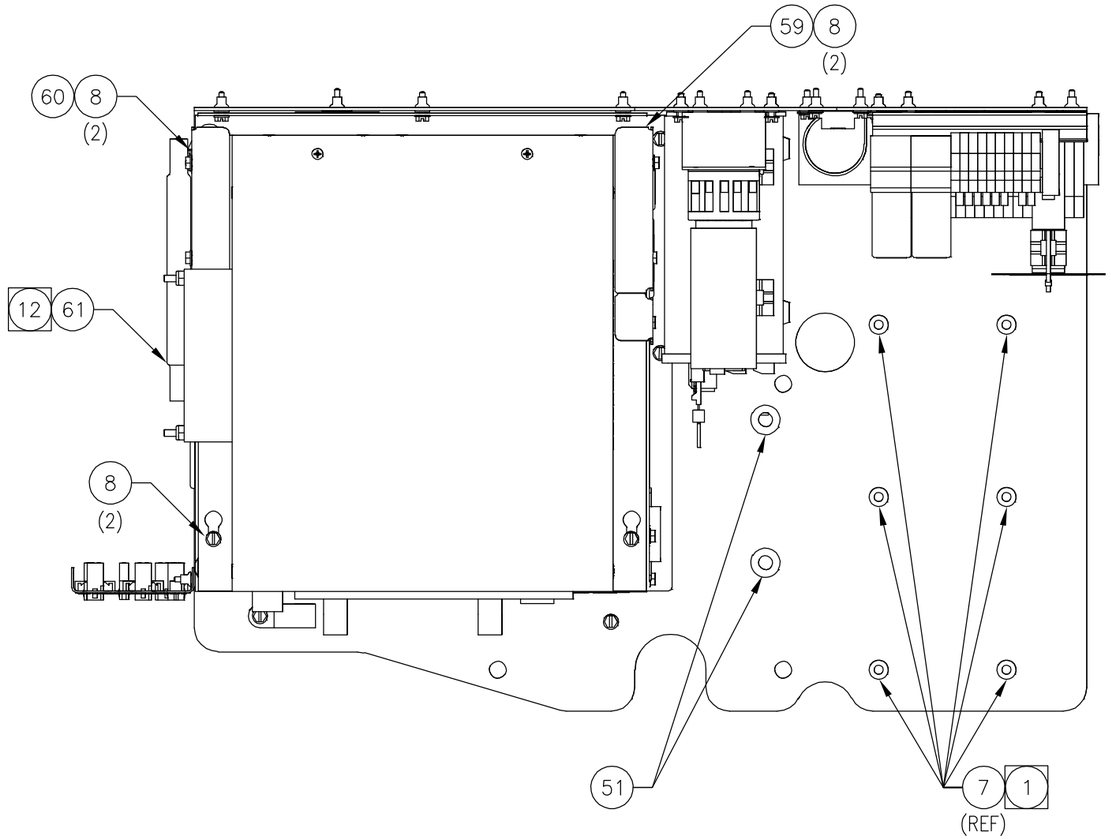

VIEW C–C

FORM #19477–037 REV B 01/20/97

LTR	ECO	DESCRIPTION	BY	DATE	APVD
N	1207–094	ADD THERMOSTAT (ITEM #97)	TB	12/28/07	RB

PRODUCT: AMTT CS

TOLERANCES: UNLESS OTHERWISE SPECIFIED

1. ALL SPECIFICATIONS SUBJECT TO CHANGE WITHOUT NOTICE.
2. UNLESS OTHERWISE SPECIFIED, ALL DIMENSIONS ARE IN INCHES.

MATERIAL: SEE PRODUCT STRUCTURE

SCALE	DATE	CHK'D	DATE
NONE	12/29/03	DC/MB	2/2/04
DRAWN		APVD	
LE		RB	

RYKO® MFG. CO. U.S.A.
GRIMES, IOWA 50111

PANEL ASSY/ AMTT CS

DWG. NO. 25910–000

REV. N

SHEET 4 OF 8

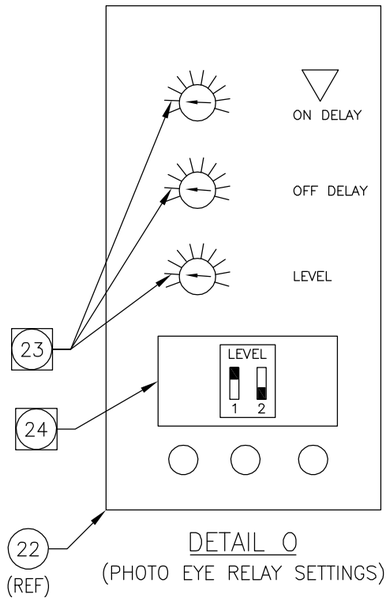

DETAIL O
(PHOTO EYE RELAY SETTINGS)

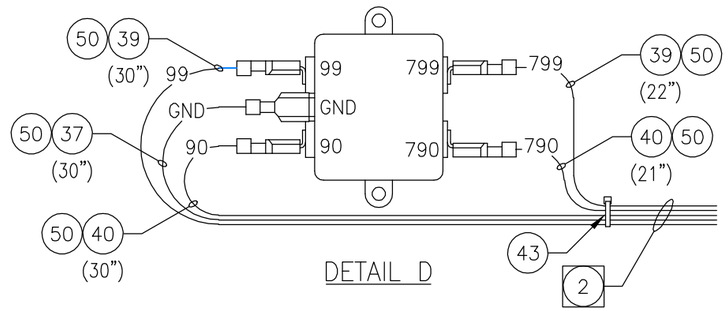

DETAIL D

DETAIL I (10)

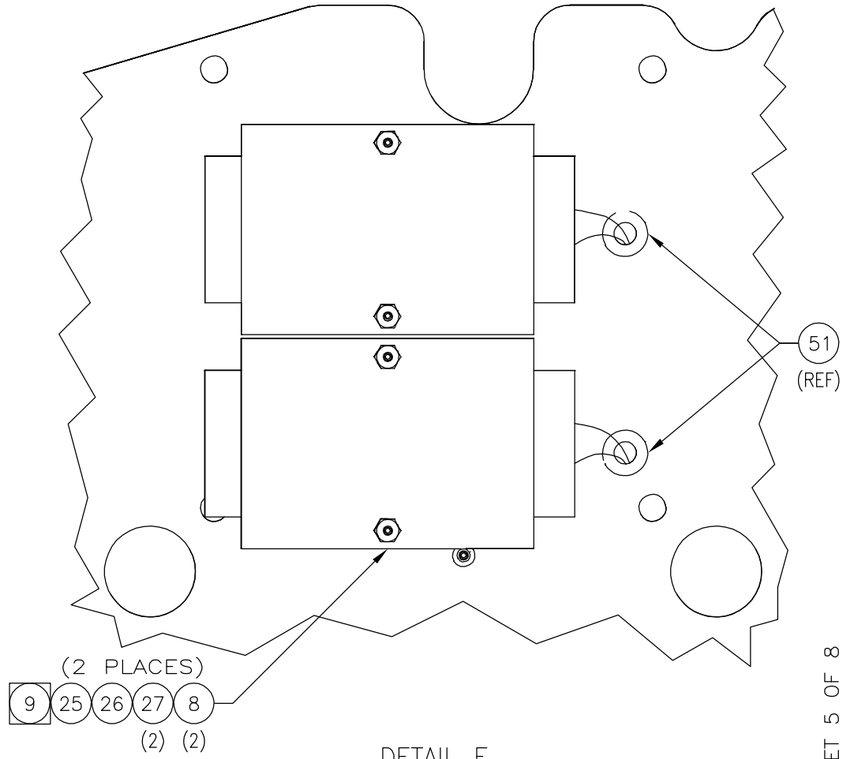

DETAIL E

LTR	ECO	DESCRIPTION	BY	DATE	APVD
N	1207–094	ADD THERMOSTAT (ITEM #97)	TB	12/28/07	RB

FORM #19477–037 REV B 01/20/97

PRODUCT: AMTT CS

TOLERANCES UNLESS OTHERWISE SPECIFIED

1. ALL SPECIFICATIONS SUBJECT TO CHANGE WITHOUT NOTICE.
2. UNLESS OTHERWISE SPECIFIED, ALL DIMENSIONS ARE IN INCHES.

MATERIAL: SEE PRODUCT STRUCTURE

SCALE: NONE | DRAWN: LE | DATE: 12/29/03 | CHK'D: DC/MB | APVD: RB | DATE: 2/2/04

SHEET 5 OF 8

RYKO® MFG. CO. U.S.A.
GRIMES,IOWA 50111

PANEL ASSY/ AMTT CS

REV. N | DWG. NO. 25910–000

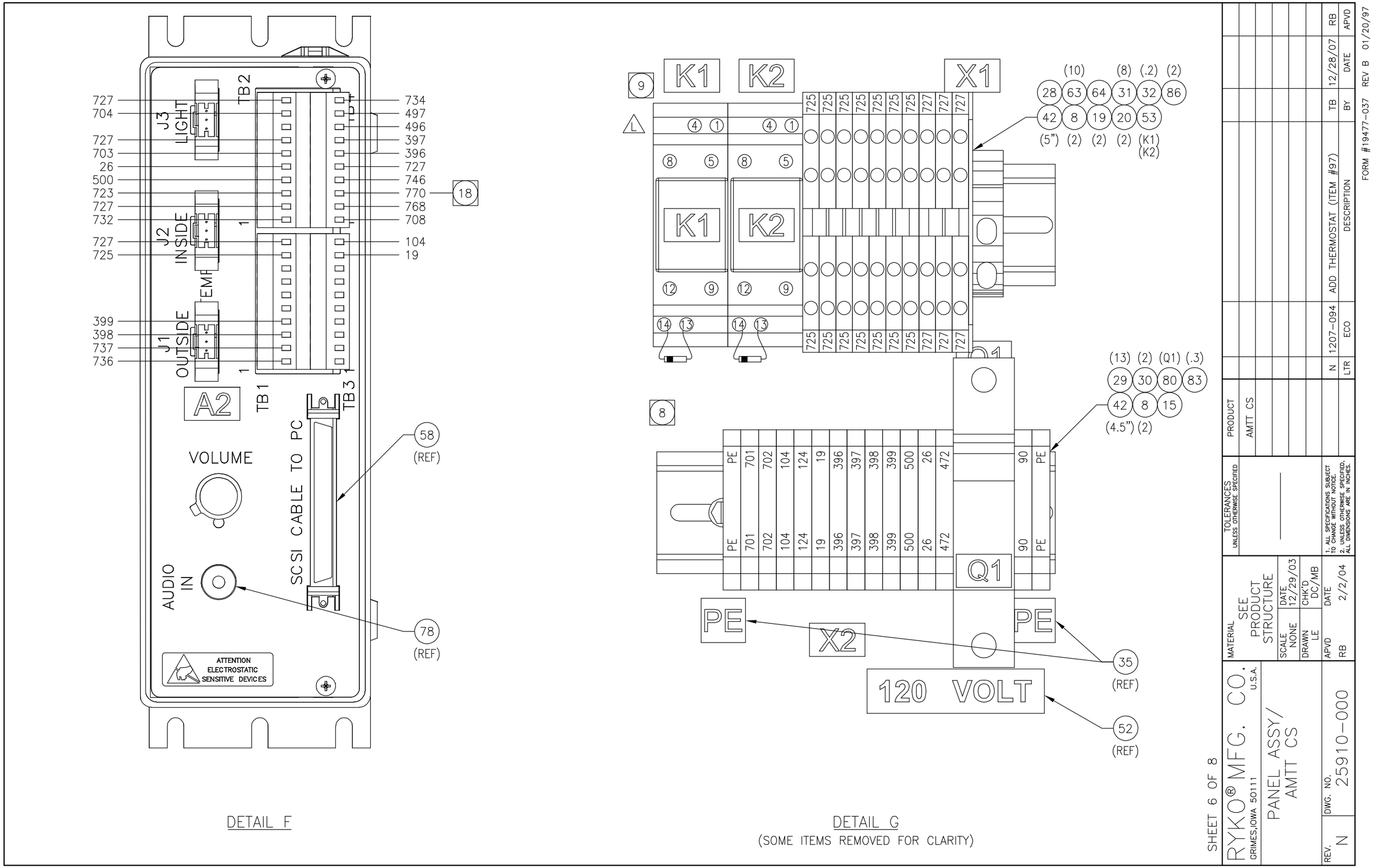

727
704
727
703
26
500
723
727
732
727
725
399
398
737
736
J3 LIGHT
J2 INSIDE
J1 OUTSIDE
TB2
TB1
TB3
734
497
496
397
396
727
746
770
768
708
104
19
18
A2
VOLUME
AUDIO IN
SCSI CABLE TO PC
58 (REF)
78 (REF)
ATTENTION ELECTROSTATIC SENSITIVE DEVICES
DETAIL F
K1
K2
X1
9
8
(10) (8) (.2) (2)
28 63 64 31 32 86
42 8 19 20 53
(5") (2) (2) (2) (K1) (K2)
(13) (2) (Q1) (.3)
29 30 80 83
42 8 15
(4.5") (2)
PE 701 702 104 124 19 396 397 398 399 500 26 472 90 PE
Q1
PE
X2
120 VOLT
35 (REF)
52 (REF)
DETAIL G
(SOME ITEMS REMOVED FOR CLARITY)
SHEET 6 OF 8
RYKO® MFG. CO.
GRIMES,IOWA 50111 U.S.A.
PANEL ASSY/ AMTT CS
REV. N
DWG. NO. 25910-000
MATERIAL SEE PRODUCT STRUCTURE
SCALE NONE
DATE 12/29/03
DRAWN LE
CHK'D DC/MB
APVD RB
DATE 2/2/04
TOLERANCES UNLESS OTHERWISE SPECIFIED
1. ALL SPECIFICATIONS SUBJECT TO CHANGE WITHOUT NOTICE.
2. UNLESS OTHERWISE SPECIFIED, ALL DIMENSIONS ARE IN INCHES.
PRODUCT AMTT CS
N 1207-094 ADD THERMOSTAT (ITEM #97) TB 12/28/07 RB
LTR ECO DESCRIPTION BY DATE APVD
FORM #19477-037 REV B 01/20/97

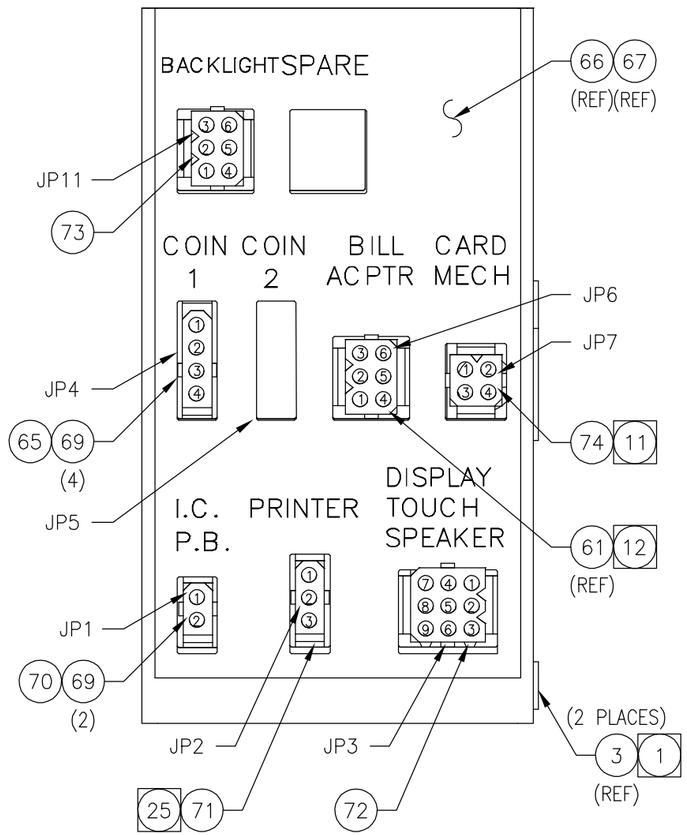

DETAIL H (7)

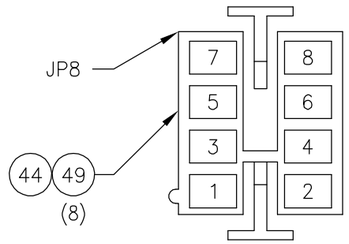

DETAIL J (14)
(ENLARGED FOR CLARITY)

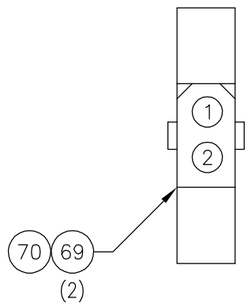

DETAIL K (15)(18)
(TYPICAL FOR JP9, JP12, AND JP13)
(ENLARGED FOR CLARITY)

(K) (25)

CONNECTOR WIRING CHART				
CONNECTOR	PIN	WIRE#	TO	FUNCTION
JP1 I.C. P.B.	1	496	A2-TB4-P8	INTERCOM P.B. SIGNAL
	2	497	A2-TB4-P9	INTERCOM P.B. SIGNAL
JP2 PRINTER (ITEM #71)	1	728	A4	+8 VDC POWER
	2	725	A4	DC COMMON
	3			NO CONNECTION
JP3 DISPLAY TOUCH SPEAKER (ITEM #72) (11)	1	726	A3	+12 VDC POWER
	2	725	A3	DC COMMON
	3	725	A3	DC COMMON
	4	724	A3	+5 VDC POWER
	5	736	A2-TB1-1	SPEAKER A
	6	737	A2-TB1-2	SPEAKER B
	7	751	A1-CN3-2	DB-9 PIN 2 (RED) TRANSMIT
	8	752	A1-CN3-3	DB-9 PIN 3 (GRN) RECEIVE
	9	753	A1-CN3-5	DB-9 PIN 5 (BLK) COM
JP4 COIN 1	1	725	X1	DC COMMON
	2	703	A2-TB2-6	BLOCKING COIL SIGNAL
	3	704	A2-TB2-9	COIN SWITCH 1 SIGNAL
	4	725	X1	DC COMMON
JP5 COIN 2	1			NO CONNECTION
	2			NO CONNECTION
	3			NO CONNECTION
	4			NO CONNECTION
JP6 BILL ACCPTR (ITEM #61) (12)	1	767	MDB BOARD	+24 VDC POWER
	2	725	MDB BOARD	DC COMMON
	3			NO CONNECTION
	4	756	DBA-RX	RX DATA FROM VALIDATIOR
	5	757	DBA-TX	TX DATA FROM VALIDATOR
	6	725	X1	DC COMMON
JP7 CARD MECH (ITEM #74) (11)	1	766	A3	+12 VDC POWER
	2	725	A3	DC COMMON
		725	A1-CN8-5	DB-9 PIN 5 (BLK) DC COM
	3	754	A1-CN8-2	DB-9 PIN 2 (WHT) TRANSMIT
	4	755	A1-CN8-3	DB-9 PIN 3 (GRN) RECEIVE
JP8 SECURITY LOOP AND FAN	1	732	A2-TB2-1	SECURITY LOOP IN BASE
	2	725	X1	DC COMMON
	3	746	A2-TB4-4	INTAKE FAN POWER
	4	725	X1	DC COMMON
	5	CBL S	PES1-P7	GRAY CABLE (SHIELD)
	6	CBL B	PES1-P5	GRAY CABLE (BLACK)
	7	CBL S	PES1-P6	BLACK CABLE (SHIELD)
	8	CBL B	PES1-P8	BLACK CABLE (BLACK)
JP9 DOOR SWITCH	1	734	A2-TB4-10	DOOR SWITCH
	2	725	X1	DC COMMON
JP10 PC CHASSIS POWER SUPPLY (ITEM #6)	1	BLK	A3	DC COMMON
	2	RED	A3	+5 VDC POWER
	3	RED	A3	+5 VDC POWER
	4			NO CONNECTION
	5	BLK	A3	DC COMMON
	6	BLK	A3	DC COMMON
	7	YEL	A3	+12 VDC POWER
	8	BLU	A3	BLUE
JP11 BACKLIGHT (ITEM #73) (11)	1			NO CONNECTION
	2	725	A3	DC COMMON
	3	726	A3	+12 VDC POWER
	4			NO CONNECTION
	5	725	A3	DC COMMON
	6	724	A3	+5 VDC POWER
JP12 EXHAUST FAN	1	770	A2-TB4-P3	+24 VDC POWER
	2	725	X1	DC COMMON
JP13 PC FAN	1	727	X1	+24 VDC POWER
	2	725	X1	DC COMMON

SHEET 7 OF 8

LTR	ECO	DESCRIPTION	BY	DATE	APVD
N	1207-094	ADD THERMOSTAT (ITEM #97)	TB	12/28/07	RB

FORM #19477-037 REV B 01/20/97

PRODUCT AMTT CS

TOLERANCES UNLESS OTHERWISE SPECIFIED

1. ALL SPECIFICATIONS SUBJECT TO CHANGE WITHOUT NOTICE UNLESS OTHERWISE STATED.
ALL DIMENSIONS ARE IN INCHES.

MATERIAL SEE PRODUCT STRUCTURE

SCALE NONE DATE 12/29/03

DRAWN LE CHK'D DC/MB

APVD RB DATE 2/2/04

RYKO® MFG. CO. U.S.A.
GRIMES,IOWA 50111

PANEL ASSY/ AMTT CS

DWG. NO. 25910-000

REV. N

WIRING CHART

	WIRE#	ITEM#	SIZE	COLOR	LENGTH	FUNCTION	FROM	TO
11	736	72	0.75mm	DK BLU	N/A	SPEAKER WIRE	A2-TB1-P1	JP3-P5
11	737	72	0.75mm	DK BLU	N/A	SPEAKER WIRE	A2-TB1-P2	JP3-P6
13	725	75	18GA	BLACK	36"	DC COMMON	A3	X1-725
13	725	75	18GA	BLACK	36"	DC COMMON	A3	X1-725
20	496	36	0.75mm	DK BLU	42"	I.C. PUSHBUTTON	A2-TB4-P8	JP1-P1
20	497	36	0.75mm	DK BLU	42"	I.C. PUSHBUTTON	A2-TB4-P9	JP1-P2
20	396	36	0.75mm	DK BLU	21"	I.C. PUSHBUTTON	A2-TB4-P6	X2-396
20	397	36	0.75mm	DK BLU	21"	I.C. PUSHBUTTON	A2-TB4-P7	X2-397
20	398	36	0.75mm	DK BLU	21"	SPEAKER WIRE	A2-TB1-P3	X2-398
20	399	36	0.75mm	DK BLU	21"	SPEAKER WIRE	A2-TB1-P4	X2-399
	703	36	0.75mm	DK BLU	39"	BLOCKING COIL	A2-TB2-P6	JP4-P2
	704	36	0.75mm	DK BLU	39"	COIN SWITCH #1	A2-TB2-P9	JP4-P3
	725	38	18GA	BLACK	37"	DC COMMON	X1-725	JP4-P1
	725	38	18GA	BLACK	37"	DC COMMON	X1-725	JP4-P4
	725	38	18GA	BLACK	19"	DC COMMON	A2-TB1-P9	X1-725
	727	81	18GA	ORANGE	19"	+24 VDC POWER	A2-TB1-P10	X1-727
	727	81	18GA	ORANGE	19"	+24 VDC POWER	A2-TB2-P10	X1-727
	727	81	18GA	ORANGE	19"	+24 VDC POWER	A2-TB2-P7	X1-727
	727	81	18GA	ORANGE	19"	+24 VDC POWER	A2-TB2-P2	X1-727
	727	81	18GA	ORANGE	19"	+24 VDC POWER	A2-TB4-P5	X1-727
	26	81	18GA	ORANGE	18"	CARWASH POWER 24 VAC	A2-TB2-P5	X2-26
	500	36	0.75mm	DK BLU	17.5"	BACK-UP SIGNAL	A2-TB2-P4	X2-500
	723	36	0.75mm	DK BLU	16.5"	PES SIGNAL	A2-TB2-P3	PES1-P9
G 20	725	38	18GA	BLACK	31"	DC COMMON	X1-725	JP9-P2
G 20	734	36	0.75mm	DK BLU	35"	DOOR SWITCH	A2-TB4-P10	JP9-P1
	732	36	0.75mm	DK BLU	44"	SECURITY LOOP IN BASE	A2-TB2-P1	JP8-P1
	746	81	18GA	ORANGE	44"	INTAKE FAN POWER	A2-TB4-P4	JP8-P3
	708	36	0.75mm	DK BLU	14.5	HEATER RELAY SIGNAL (K1)	A2-TB4-P1	K1-P14 (DIODE)
	768	36	0.75mm	DK BLU	15.5	BILL & CARD RELAY SIGNAL (K1)	A2-TB4-P2	K2-P14 (DIODE)
	104	36	0.75mm	DK BLU	16"	START BUTTON SIGNAL	A2-TB3-P10	X2-104
	19	36	0.75mm	DK BLU	17"	START BUTTON COMMON	A2-TB3-P9	X2-19
	19	36	0.75mm	DK BLU	10"	SIGNAL SIGNAL COMMON	PES1-P1	X2-19
	124	36	0.75mm	DK BLU	9"	SIGN SIGNAL	PES1-P3	X2-124
	727	81	18GA	ORANGE	9.5"	PES POWER (+24 VDC)	PES1-P2	X1-727
	725	38	18GA	BLACK	10"	PES POWER COMMON	PES1-P10	X1-725
19		45	CABLE	WHITE	41"	GRAY CABLE (PES)	PES1-P5	JP8-P6
19		45	CABLE	SHIELD	41"	GRAY CABLE (PES)	PES1-P7	JP8-P5
19		46	CABLE	WHITE	41"	BLACK CABLE (PES)	PES1-P6	JP8-P8
19		46	CABLE	SHIELD	41"	BLACK CABLE (PES)	PES1-P8	JP8-P7
	725	38	18GA	BLACK	40"	DC COMMON	JP8-P2	X1-725
	725	38	18GA	BLACK	40"	DC COMMON	JP8-P4	X1-725
G	725	38	18GA	BLACK	6"	DC COMMON	K1-P13 (DIODE)	X1-725
G	725	38	18GA	BLACK	7"	DC COMMON	K2-P13 (DIODE)	X1-725
	727	81	18GA	ORANGE	6"	+24 VDC POWER	K2-P9	X1-727
	725	38	18GA	BLACK	27"	DC COMMON	A5-V-	X1-725
	727	81	18GA	ORANGE	29"	+24 VDC POWER	A5-V+	X1-727
	790	40	1.5mm	LT BLU	19"	115 VAC NEUTRAL	A5-N	K1-12
	799	39	1.5mm	BROWN	19"	115 VAC HOT	A5-L	K1-9
	GND	37	0.75mm	GRN/YEL	19"	EARTH GROUND WIRE	A5-G	X2-PE-LEFT
	797	39	1.5mm	BROWN	15"	HEATER POWER (115 VAC)	HEATER PADS	K1-5
	798	40	1.5mm	LT BLU	15"	HEATER COMMON (115 VAC)	HEATER PADS	K1-8
	790	40	1.5mm	LT BLU	18"	115 VAC NEUTRAL	Z1-LOAD-N	K1-12
	799	39	1.5mm	BROWN	19"	115 VAC HOT	Z1-LOAD-L	K1-9
	90	40	1.5mm	LT BLU	30"	115 VAC NEUTRAL	Z1-LINE-N	X2-90
	99	39	1.5mm	BROWN	30"	115 VAC HOT	Z1-LINE-L	Q1-TOP
	GND	37	0.75mm	GRN/YEL	30"	EARTH GROUND WIRE	Z1-GROUND	X2-PE-RIGHT
21	790	6	CABLE	WHT OR BLU	25"	115 VAC NEUTRAL	A5-N	A3
21	799	6	CABLE	BLK OR BRN	25"	115 VAC HOT	A5-L	A3
21	GND	6	CABLE	GRN OR Y/G	25"	EARTH GROUND WIRE	A5-G	A3
20	701	36	0.75mm	DK BLU	45"	COMMUNICATION CAW	A1-CN5	X2-701
20	702	36	0.75mm	DK BLU	45"	COMMUNICATION CAW	A1-CN5	X2-702
G 18	725	38	18GA	BLACK	13"	EXHAUST FAN	X1-725	JP12-P2
G 18	770	81	18GA	ORANGE	15"	EXHAUST FAN	A2-TB4-P3	JP12-P1
		72	CABLE	N/A	N/A	TOUCH SCREEN	JP3	A1-CN3
		61	CABLE	N/A	N/A	BILL ACCEPTOR	JP6	A1-CN9
	767	61	18GA	ORANGE	N/A	BILL ACCEPTOR POWER	JP6	K2-P1
	725	61	18GA	BLACK	N/A	BILL ACCEPTOR COMMON	JP6	X1-725
		74	CABLE	N/A	N/A	CARD MECHANISM	JP7	A1-CN8
		74	CABLE	N/A	N/A	CARD MECHANISM	JP7	A3
	726	74	18GA	YELLOW	N/A	CARD MECHANISM POWER	JP7	K2-P12
	766	74	18GA	YELLOW	N/A	CARD MECHANISM POWER (SWITCH)	JP7	K2-P4
20	725	38	18GA	BLACK	45"	PC CHASSIS (EXTERNAL FAN)	JP13	X1-725
20	727	81	18GA	ORANGE	45"	PC CHASSIS (EXTERNAL FAN)	JP13	X1-727
N 28	727	81	18GA	ORANGE	6"	THERMAL DISC	A6-A	X1-727
N 28	708	36	0.75mm	DK BLU	4"	THERMAL DISC	A6-B	K1-P14

SHEET 8 OF 8

RYKO® MFG. CO.
GRIMES,IOWA 50111 U.S.A.

PANEL ASSY/
AMTT CS

REV.	DWG. NO.
N	25910-000

MATERIAL	
SEE PRODUCT STRUCTURE	
SCALE NONE	DATE 12/29/03
DRAWN LE	CHK'D DC/MB
APVD RB	DATE 2/2/04

TOLERANCES UNLESS OTHERWISE SPECIFIED

1. ALL SPECIFICATIONS SUBJECT TO CHANGE WITHOUT NOTICE.
2. UNLESS OTHERWISE SPECIFIED, ALL DIMENSIONS ARE IN INCHES.

PRODUCT: AMTT CS

LTR	ECO	DESCRIPTION	BY	DATE	APVD
N	1207-094	ADD THERMOSTAT (ITEM #97)	TB	12/28/07	RB

DOOR SWITCH ASSY/AMTT CS

PART NO. 22477-001 REVISION -

ITEM	QTY.	UOM	PART NO.	DESCRIPTION
1	1	EA	18438-001	SWITCH/DOOR,1/4" MINI,SPSI
2	1	EA	13697-298	CONNECTOR/PLUG,2CKT,.062
3	2	EA	13697-296	CONNECTOR/PIN,MALE,24-18G,.062

DWG. NO. 22477–001

NOTES:

1. TWIST WIRES A MINIMUM OF 3 TURNS PER INCH.
2. IF THIS ASSEMBLY WILL BE MADE FOR STOCK, TAPE THE MAGNET PART OF THE SWITCH TO THE SWITCH TO KEEP ASSEMBLY TOGETHER. ALSO, DISCARD THE NAILS THAT COME WITH THE SWITCH (ITEM #1).
3. DIMENSION SHOWN IS A MINIMUM LENGTH AFTER THE WIRES HAVE BEEN TWISTED.

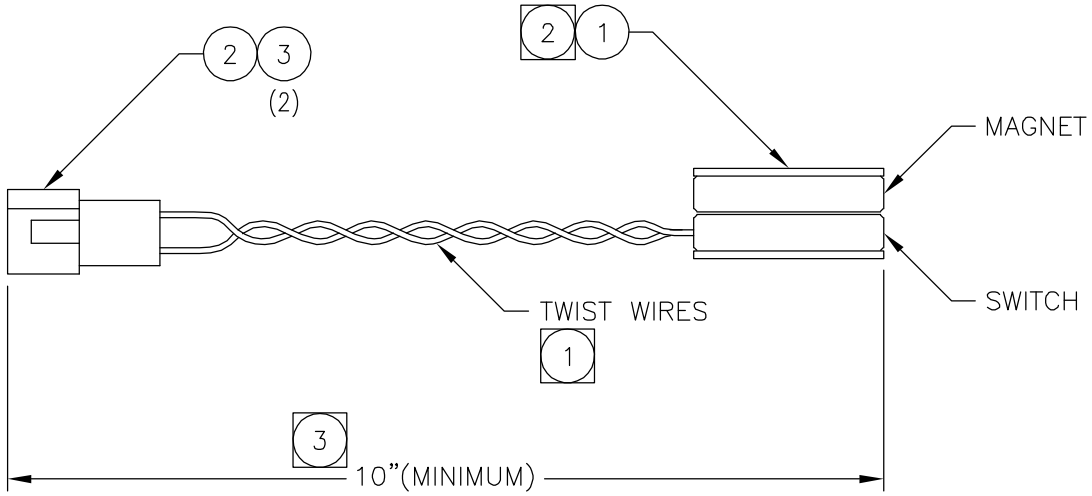

LTR	ECO	DESCRIPTION	BY	DATE	APVD	PRODUCT
						AMTT CS
–	1103–058	RELEASING DRAWING	MB	11/25/03	RB	

TOLERANCES UNLESS OTHERWISE SPECIFIED

1. ALL SPECIFICATIONS SUBJECT TO CHANGE WITHOUT NOTICE.
2. UNLESS OTHERWISE SPECIFIED, ALL DIMENSIONS ARE IN INCHES.

MATERIAL SEE PRODUCT STRUCTURE

SCALE	DATE
NONE	11/11/03
DRAWN BEERENDS	CHK'D TB/SM
APVD RB	DATE 11/25/03

RYKO® MFG. CO.
GRIMES,IOWA 50111 U.S.A.

DOOR SWITCH ASSY/ AMTT CS

DWG. NO. 22477–001 REV. –

FORM #19477–036 REV A 01/18/96

LABEL/"NO CASH"

PART NO. 24421-000 REVISION -

ITEM	QTY.	UOM	PART NO.	DESCRIPTION
1	1	EA	22748-000	GRAPHIC SPECS/NONREPOSIT

DWG. NO. 24421–000

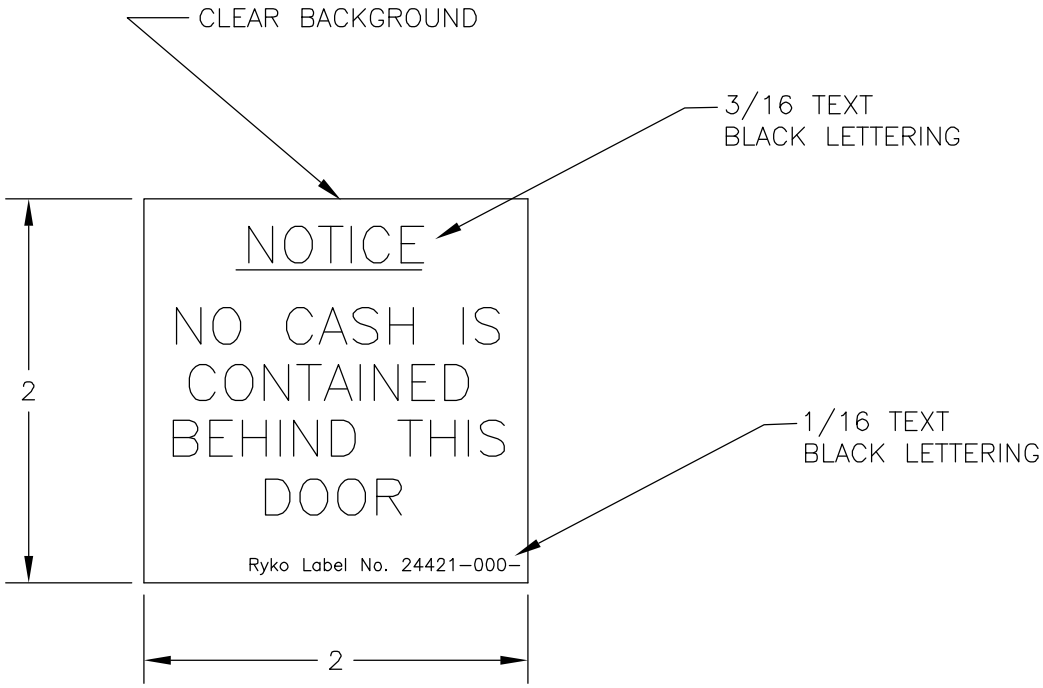

						PRODUCT
						AMTT
–	0301–056	RELEASING DRAWING	LS	3/19/01	RB	
LTR	ECO	DESCRIPTION	BY	DATE	APVD	

TOLERANCES UNLESS OTHERWISE SPECIFIED
LOCATIONS: ±1/32

1. ALL SPECIFICATIONS SUBJECT TO CHANGE WITHOUT NOTICE.
2. UNLESS OTHERWISE SPECIFIED, ALL DIMENSIONS ARE IN INCHES.

MATERIAL
GRAPHIC SPECS/ NONREPOSIT 22748–000

SCALE	DATE
NONE	3/12/01
DRAWN	CHK'D
LS	DC/RB
APVD	DATE
RB	3/19/01

RYKO® MFG. CO.
GRIMES,IOWA 50111 U.S.A.

LABEL/" NO CASH"

DWG. NO. 24421–000 REV. –

FORM #19477–036 REV A 01/18/96

BOX ASSY/SENSOR HOUSING,PED

PART NO. 23152-002 REVISION A

ITEM	QTY.	UOM	PART NO.	DESCRIPTION
1	1	EA	22502-004	ENVIRONMENT SEN ASSY/AMTT & CS
2	1	EA	26405-000	MOUNT/ENVIRONMENT SENSOR
3	2	EA	10034-274	SCREW/MACH,#6-32X3/8,SLHWH,SS
4	2	EA	13945-002	NUT/ #6-32,NYL INS,SS
5	1	EA	10547-004	ENCL/J-BOX,3/4OUTL-3,30.5CU IN
6	5	EA	10005-201	WIRE TIE/4",5/8"MAX DIA
7	2	EA	10192-201	SCREW/TPG,#10x1/2,SLHWH,SS

DWG. NO. 23152–002

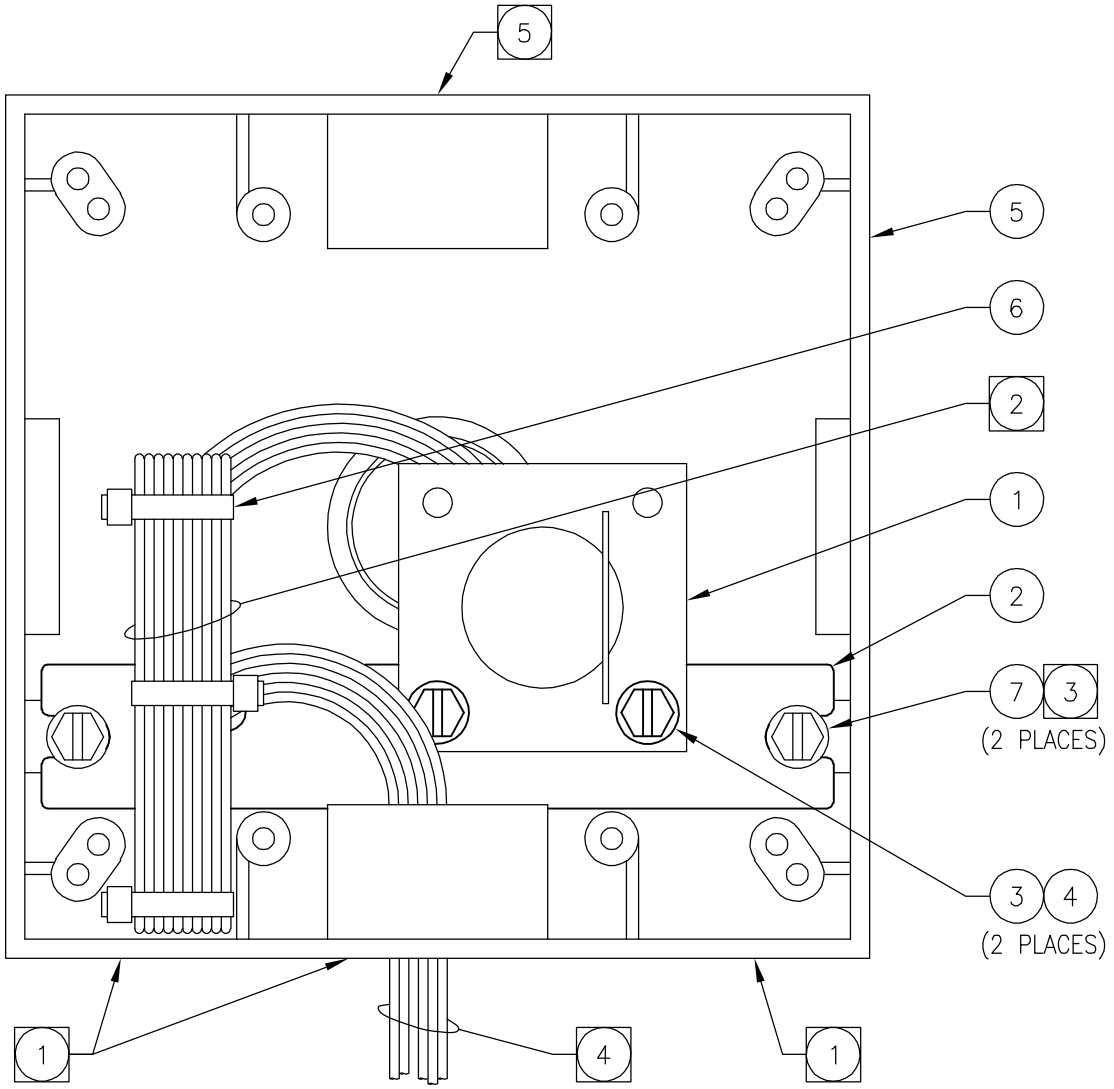

NOTES:

1. DRILL THREE ø1/4" DRAIN HOLES INTO BOTTOM OF THE ENCLOSURE (ITEM #5).
2. LOOP A MINIMUM OF 4 FOOT OF WIRE FROM ENVIRONMENTAL SENSOR ASSEMBLY (ITEM #1) INSIDE THE ENCLOSURE AND WIRE TIE (ITEM #6) TO HOLD IN PLACE.
3. PLACE THE MOUNT/ENVIRONMENT SENSOR (ITEM #2) THROUGH THE LOOP OF WIRE. SECURE THE MOUNT/ENVIRONMENT SENSOR (ITEM #2) USING THE TWO SELF TAPPING SCREWS (ITEM #7).
4. LOOP A MINIMUM OF 4 FOOT OF WIRE FROM ENVIRONMENTAL SENSOR ASSEMBLY (ITEM #1) OUTSIDE THE ENCLOSURE AND WIRE TIE (ITEM #6) TO HOLD IN PLACE.
5. ADD PLUG SUPPLIED WITH THE ENCLOSURE (ITEM #5) INTO THE TOP HOLE ONLY.

LTR	ECO	DESCRIPTION	BY	DATE	APVD
A	0905–081	ADDED MOUNT SCREWS	MB	9/22/05	RB
–	0205–064	RELEASING DRAWING	MB	3/11/05	RB

PRODUCT
AMTT
AMTT CS

TOLERANCES
UNLESS OTHERWISE SPECIFIED

1. ALL SPECIFICATIONS SUBJECT TO CHANGE WITHOUT NOTICE.
2. UNLESS OTHERWISE SPECIFIED, ALL DIMENSIONS ARE IN INCHES.

MATERIAL
SEE PRODUCT STRUCTURE

SCALE	DATE
NONE	2/23/05
DRAWN	CHK'D
BEERENDS	TB/SM
APVD	DATE
RB	3/11/05

RYKO® MFG. CO.
GRIMES,IOWA 50111 U.S.A.

BOX ASSY/ SENSOR HOUSING, PED

DWG. NO. 23152–002 REV. A

FORM #19477–036 REV A 01/18/96

CABLE ASSY/PRINTER POWER

PART NO. 25914-003 REVISION C

ITEM	QTY.	UOM	PART NO.	DESCRIPTION
1	1	EA	15421-012	PRINTER CABLE/POWER,5VDC
2	2	FT	10279-293	WIRE/STRANDED,18GA,300V,BLUE
3	2	FT	10279-290	WIRE/STRANDED,18GA,300V,BLACK
4	0	FT	11153-200	TUBING/HEAT SHRINK,1/8" OD
5	0	FT	14181-000	TUBING/HEAT SHRINK,3/16" OD
6	1	EA	13697-299	CONNECTOR/PLUG,3CKT,.062
7	2	EA	13697-296	CONNECTOR/PIN,MALE,24-18G,.062

DWG. NO. 25914–003

NOTES:

1. CUT ALL WIRES ON PRINTER POWER CABLE ASSEMBLY (ITEM #1) TO 3" LONG.
2. SOLDER SMALL WIRES ON THE CONNECTOR TO THE LARGE WIRE AS SHOWN, THEN INSTALL SMALL HEAT SHRINK TUBING (ITEM #4) OVER THE JOINT.
4. AFTER PUTTING ON THE SMALL HEAT SHRINK TUBING (ITEM #4), INSTALL LARGER HEAT SHRINK TUBING (ITEM #5) OVER ALL WIRING.
5. AFTER CRIMPING PINS (ITEM #7) ONTO BOTH WIRES, INSERT THE WIRE INTO THE PROPER HOLE IN CONNECTOR (ITEM #6).

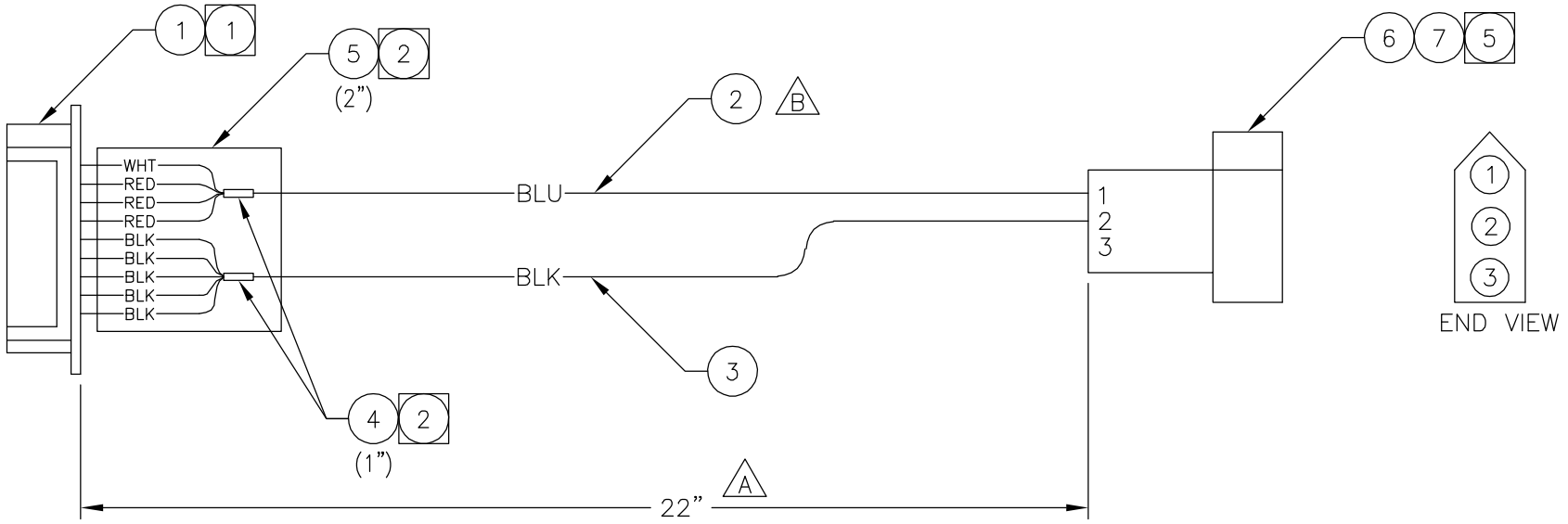

LTR	ECO	DESCRIPTION	BY	DATE	APVD
C	0904–098	REPLACED WIRE	MB	9/27/04	RB
B	0404–043	REP ITEM #2; DEL NOTE 3	MB	4/20/04	RB
A	0104–002	REV WIRE LENGTH FROM 20 TO 22	MB	1/23/04	GDL
–	1103–058	RELEASING DRAWING	MB	11/25/03	RB

PRODUCT: AMTT CS

TOLERANCES UNLESS OTHERWISE SPECIFIED
LOCATIONS: ±2

1. ALL SPECIFICATIONS SUBJECT TO CHANGE WITHOUT NOTICE.
2. UNLESS OTHERWISE SPECIFIED, ALL DIMENSIONS ARE IN INCHES.

MATERIAL: SEE PRODUCT STRUCTURE

SCALE	DATE
NONE	11/13/03
DRAWN	CHK'D
BEERENDS	TB/SM

APVD	DATE
RB	11/25/03

RYKO® MFG. CO.
GRIMES,IOWA 50111 U.S.A.

CABLE ASSY/
PRINTER POWER

DWG. NO. 25914–003 REV. C

FORM #19477–036 REV A 01/18/96

DISPLAY ASSY/12.1" W/HEATERS

PART NO. 25919-004 REVISION A

ITEM	QTY.	UOM	PART NO.	DESCRIPTION
0	1	EA	70002-004	PUR KIT/DISPLAY,12.1",2008
1	1	EA	27734-000	LCD SCREEN ASSY/HEATED,12.1"
2	1	EA	25890-004	PANEL SWLDT/TOUCHSCREEN,BOTTOM
3	1	EA	25890-005	PANEL SWLDT/TOUCHSCREEN,MIDDLE
4	1	EA	25890-007	PANEL/TOUCHSCREEN,TOP COVER
9	2	FT	10744-221	GROMMET/EDGE MAT,ADHESIVE
10	14	EA	15481-001	NUT/NYLON HEX,#4-40
12	18	EA	13708-001	STANDOFF/.25"ODx.25LG,NYLON
14	1	EA	24983-033	INVERTER BOARD/BKLT,22W,HS
15	1	EA	24983-038	CONVERTER SETTINGS/VGA TO LCD
18	1	EA	25914-017	CABLE ASSY/INV PWR,LT SNSR,HTR
19	14	EA	15481-002	NUT/NYLON HEX,#6-32
21	8	EA	16475-001	RUBBER FOOT/ROUND,W/ADHESIVE
22	1	EA	24984-008	TOUCHSCREEN/NFI,12.1",W/CONTRL
23	1	EA	13623-001	BAG/PLASTIC,LOCKING,6"x6"
24	1	EA	10345-202	WIRE NUT/ORANGE
25	1	EA	24983-013	CABLE/VGA,HDDB15,M TO M,5-6FT
26	6	EA	10038-221	WASHER/LOCK,INTL TOOTH,#4,SS
27	1	EA	24983-036	CABLE/DISPLAY,12.1",COLOR
28	1	EA	15483-003	MOUNTING PAD/CABLE,ADHESIVE
29	1	EA	25914-016	CABLE ASSY/DOOR POWER
30	1	EA	10744-206	GROMMET/INSUL,3/4x7/8x3/32
31	1	EA	23639-000	LABEL/ESD SENSITIVE,1.5"X.375"
32	1	EA	24983-039	OSD SETTINGS/DIGITAL
33	10	EA	10005-201	WIRE TIE/4",5/8"MAX DIA
34	3	EA	15544-012	FAN/COOLING,12VDC,40X20MM
35	2	EA	13697-298	CONNECTOR/PLUG,2CKT,.062
36	4	EA	13697-296	CONNECTOR/PIN,MALE,24-18G,.062
37	6	EA	10039-202	SCREW/MACH,#6-32x1",PH,SS
38	1	EA	25794-001	PLASTIC/ABS,BL INV BD
39	2	FT	13766-000	TAPE/DOUBLE SIDED,1"Wx.045THK
40	1	EA	26559-000	MOUNT CHANNEL/DISPLAY,BOTTOM
41	2	EA	26559-001	MOUNT CHANNEL/DISPLAY,SIDE
42	4	EA	26559-002	MOUNT BRACKET/DISPLAY
43	7	EA	10604-208	RIVET/AL&STL,.125,.063-.125,BL

DISPLAY ASSY/12.1" W/HEATERS

PART NO. 25919-004 REVISION A

ITEM	QTY.	UOM	PART NO.	DESCRIPTION
44	1	EA	13945-001	NUT/ #4-40,NYL INS,SS
45	1	EA	10034-242	SCREW/MACH,#4-40x3/8,RNDH,SS
50	1	EA	01191-002	TEST PROC/DISPLAY ASSY,AMTT CS
100	1	BD	15599-000	POLYPROPYLENE CUSHION MATERIAL

NOTES:

1. BEFORE ATTACHING THE LCD SCREEN (ITEM #1) TO THE BOTTOM PANEL (ITEM #2) ASSEMBLE THE GROMMETS (ITEM #9 & #30) INTO THE BOTTOM PANEL. INSTALL THE BOTTOM AND STATIONARY SIDE MOUNT BRACKET (ITEM #40, #41, #42, & #43). ATTACH THE DISPLAY CABLE (ITEM #27) TO THE LCD SCREEN. FEED THE DISPLAY CABLE THROUGH THE TOP GROMMET AND FEED THE DISPLAY POWER CABLE THROUGH THE LOWER GROMMET ROUTING THE POWER CABLES OUT OF THE WAY OF THE TOUCHSCREEN SLOT IN THE BOTTOM PANEL. FEED THE BLACK 18GA WIRE FROM THE RESISTOR ON THE LCD SCREEN ASSY THROUGH THE SMALLER TOP GROMMET. ATTACH THE LCD SCREEN TO THE BOTTOM PANEL BY INSERTING THE BOTTOM OF THE DISPLAY INTO THE BOTTOM MOUNT BRACKET. THEN SLIDE THE DISPLAY OVER INTO THE STATIONARY SIDE MOUNT BRACKET. WHEN IN PLACE SECURE WITH MOVABLE SIDE MOUNT BRACKET (ITEMS #41, #42, & #43), SCREWS (ITEM #45), AND NUT (ITEM #44).

2. BEFORE ATTACHING THE MIDDLE PANEL TO THE BOTTOM PANEL CONNECT CABLES.
   - –ATTACH THE LCD SCREEN POWER CABLES FROM LOWER GROMMET TO THE BACKLIGHT INVERTER BOARD (ITEM #14).
   - –ATTACH THE DISPLAY CABLES FROM UPPER GROMMET TO THE LCD BOARD (ITEM #15).
   - –ATTACH THE VGA CABLE (ITEM #25) TO THE LCD BOARD (ITEM #15).
   - –ATTACH THE CABLE ASSY (ITEM #18) TO THE INVERTER BOARD (ITEM #14) AND TO THE LCD SCREEN ASSY (ITEM #1). USE WIRE NUT (ITEM #24) TO CONNECT THE BLACK 18GA WIRE FROM THE CABLE ASSY TO THE BLACK 18GA WIRE FROM THE LCD SCREEN ASSY.
   - –ATTACH THE LCD CABLE (ITEM #32) TO THE LCD BOARD (ITEM #15).
   - –ATTACH THE POWER CONNECTOR FROM THE DOOR POWER CABLE (ITEM #29) TO THE LCD BOARD (ITEM #15) USE A WIRE TIE (ITEM #33) AND A MOUNT PAD (ITEM #28) TO HELP HOLD THE CABLE. APPLY THE MOUNT PAD SO THAT IT WILL BE COVERED BY THE MIDDLE PANEL.
   - –ATTACH THE SHORTER 2 PIN CONNECTOR FROM THE DOOR POWER CABLE (ITEM #29) TO THE FANS MOUNTED TO THE BOTTOM PANEL.

3. ADD PINS AND PLUG CONNECTOR TO THE FANS, TRIM WIRES AS NEEDED. PIN #1 IS RED WIRES AND PIN #2 IS BLACK WIRES

4. BEFORE MOUNTING LCD OSD BOARD (ITEM #32) ATTACH CABLE TO THE BOTTOM OF BOARD. ROUTE OTHER END OF CABLE TO THE LCD BOARD.

5. BEFORE ATTACHING THE TOP COVER TO THE MIDDLE PANEL CONNECT CABLES.
   - –ATTACH THE LCD CABLE FROM THE DOOR POWER CABLE (ITEM #29) TO THE TOUCHSCREEN CONTROLLER BOARD (ITEM #22).
   - –ATTACH THE LONGER 2 PIN CONNECTOR FROM THE DOOR POWER CABLE (ITEM #29) TO THE FAN MOUNTED TO THE MIDDLE PANEL.
   - –OPEN THE CONNECTOR ON THE TOUCHSCREEN CONTROLLER BOARD (ITEM #22) SO THE TOUCHSCREEN CABLE CAN BE PLUGGED IN WITHOUT REMOVING THE TOP COVER.

6. REMOVE TOUCHSCREEN CONTROLLER BOARD AND DISC FROM THE CARDBOARD PACKAGING. LEAVE TOUCHSCREEN (ITEM #22) IN THE CARDBOARD PACKAGING AND PLACE THE DISC INTO A BAG (ITEM #23) AND TAPE THE BAG TO THE TOUCHSCREEN PACKAGING.

7. WIRE TIE AS NEEDED TO CREATE A NEAT AND PROFESSIONAL APPEARANCE. AFTER ASSEMBLY IS COMPLETE LOOP CABLES AND WIRE TIE.

8. PLACE DISPLAY ASSEMBLY INTO A ESD BAG, AND WRAP THE DISPLAY WITH POLYPROPYLENE CUSHION MATERIAL (ITEM #100). PLACE THE TOUCHSCREEN STILL IN ITS CARDBOARD PACKAGING AND THE WRAPPED DISPLAY INTO A BOX. SEAL THE BOX TO KEEP THE DISPLAY DUST FREE AND LABEL THE BOX WITH THE DISPLAY ASSEMBLY'S PART NUMBER.

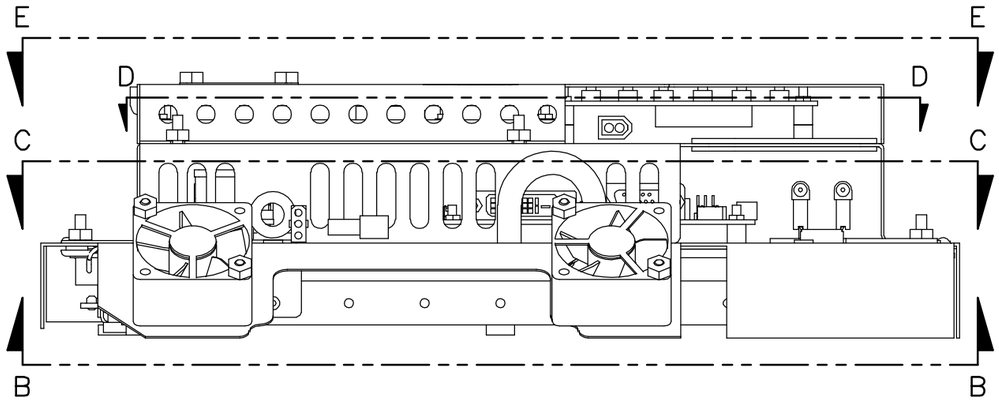

VIEW A–A

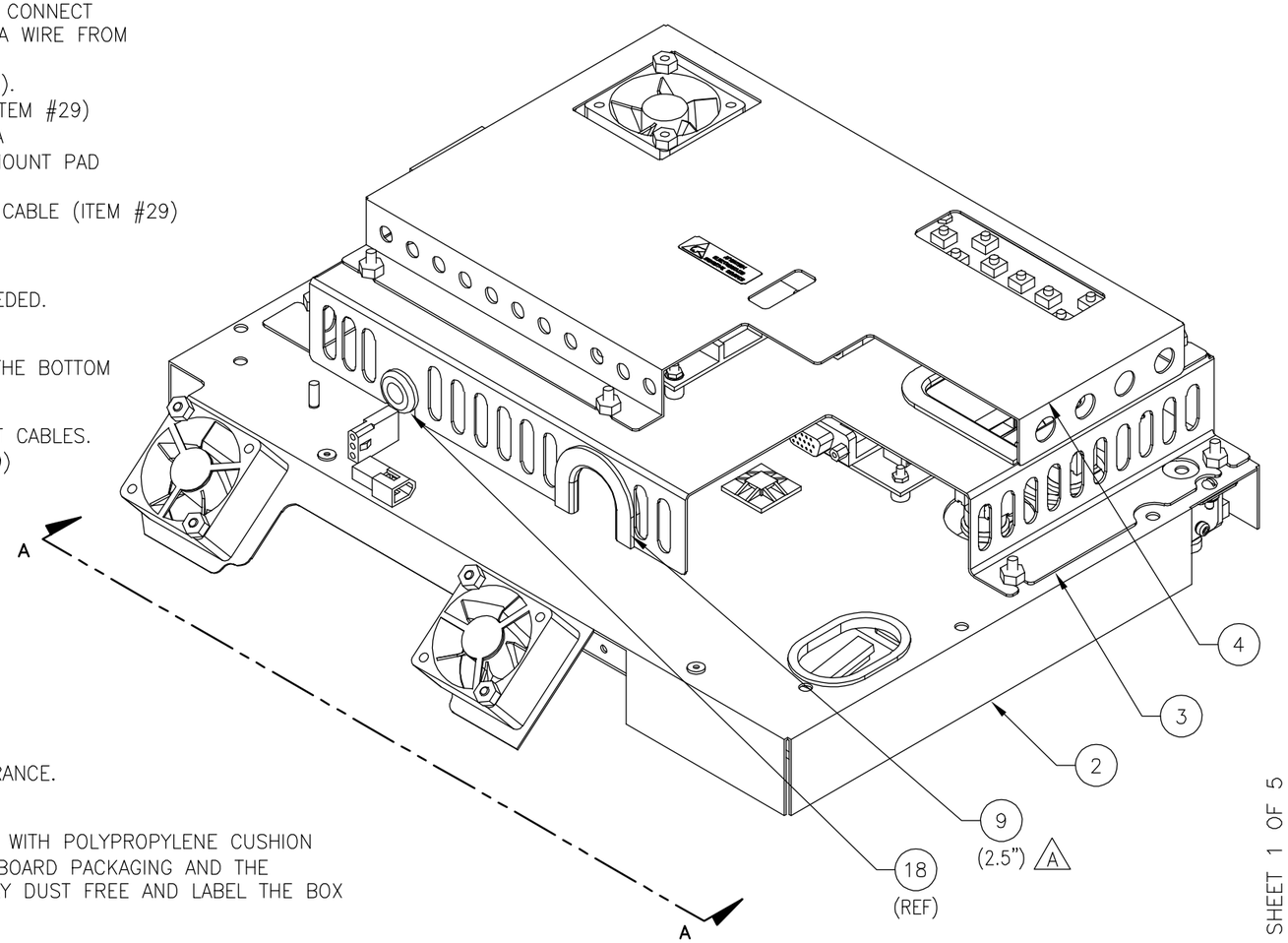

LTR	DESCRIPTION	DATE	BY	APVD
A	REV WIRING & CALLOUTS, SHT 1, 3 & 5	9/12/08	KS	RB
–	RELEASED DRAWING	7/3/08	WD	RB
	ECO		BY	DATE
	0908–046			
	0708–008			

PRODUCT AMTT CS

TOLERANCES UNLESS OTHERWISE SPECIFIED

1. ALL SPECIFICATIONS SUBJECT TO CHANGE WITHOUT NOTICE.
2. UNLESS OTHERWISE SPECIFIED, ALL DIMENSIONS ARE IN INCHES.

MATERIAL SEE PRODUCT STRUCTURE

SCALE NONE DATE 7/2/08
DRAWN WEDDLE CHK'D RB
APVD RB DATE 7/3/08

RYKO® MFG. CO. U.S.A.
GRIMES,IOWA 50111

DISPLAY ASSY/ 12.1" W/HEATERS

DWG. NO. 25919–004
REV. A

SHEET 1 OF 5

FORM #19477–037 REV B 01/20/97

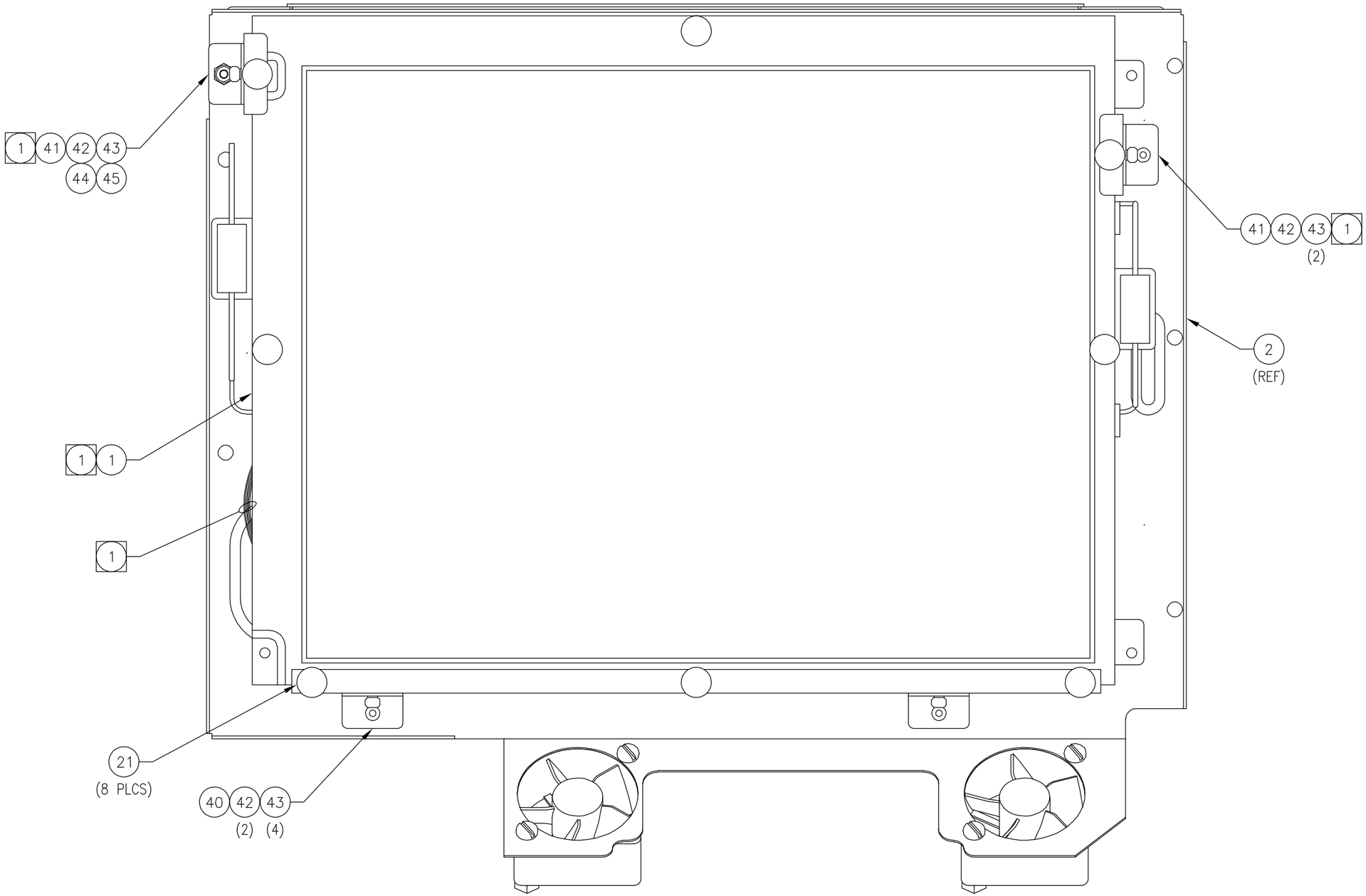

VIEW B–B
(BOTTOM VIEW ITEM #2)

FORM #19477–114 REV – 4/14/08

SHEET 2 OF 5

RYKO® MFG. CO. U.S.A.
GRIMES,IOWA 50111

DISPLAY ASSY/
12.1" W/HEATERS

MATERIAL	SEE PRODUCT STRUCTURE	DATE 7/2/08
SCALE NONE		CHK'D RB
DRAWN WEDDLE		APV'D RB
		DATE 7/3/08

REV. A | DWG. NO. 25919–004

NOTES:

(9) THE FANS (ITEM #34) MOUNTED TO THE BOTTOM PANEL (ITEM #2) BLOW DOWN TOWARDS THE MOUNTING SURFACE. THE FAN (ITEM #34) MOUNTED TO THE MIDDLE PANEL (ITEM #3) BLOW UP AWAY FROM THE MOUNTING SURFACE.

(10) CUT GROMMET MATERIAL TO LENGTH TO FIT AROUND INSIDE OF OPENING. MAKE SURE WIRES ARE NOT PINCHED NOR STRADDLED OVER THE CONNECTOR SUCH THAT THE WIRES ARE PULLED TIGHT, POTENTIALLY DAMAGING THEIR CONNECTIONS IN THE CONNECTOR.

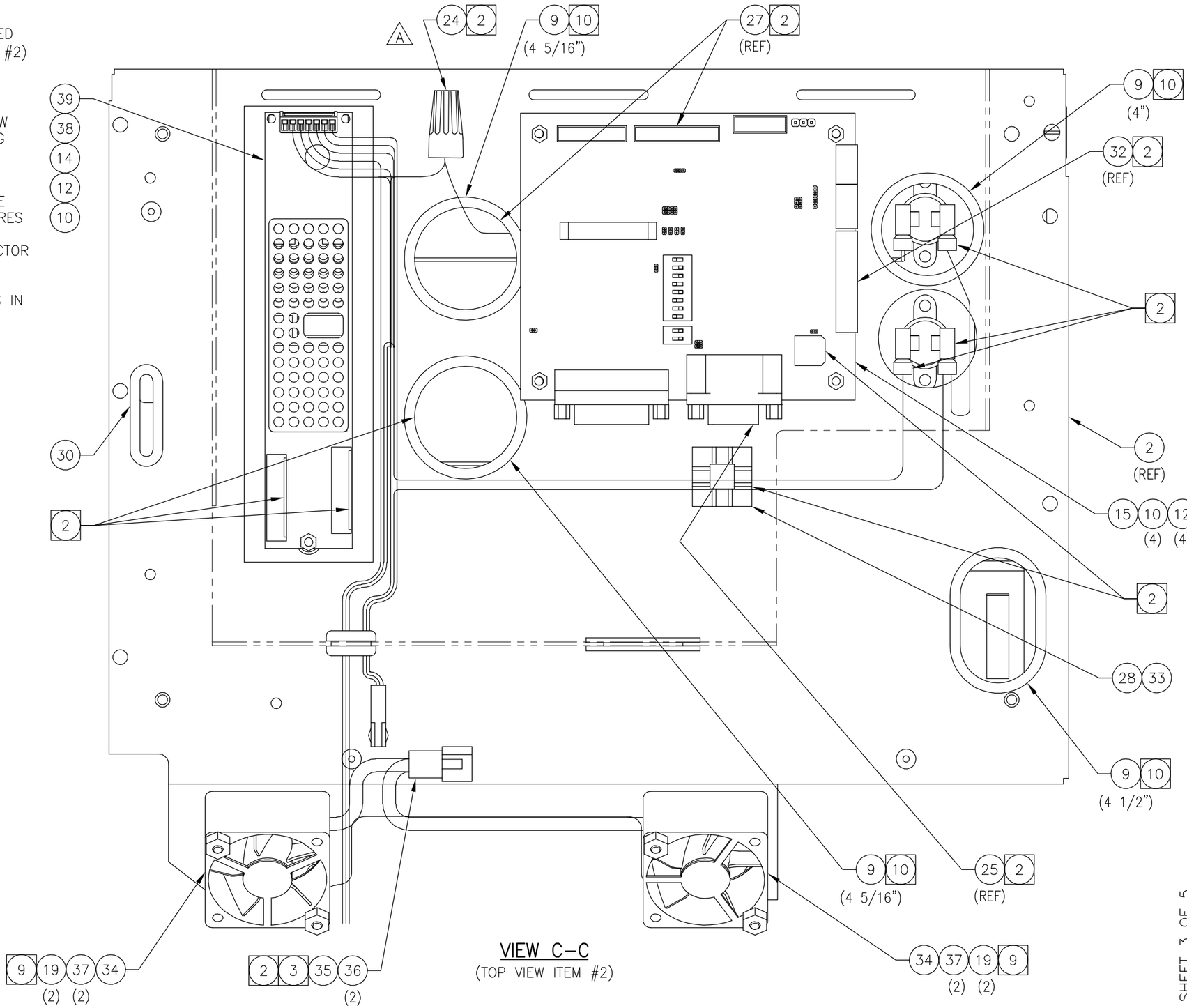

VIEW C–C
(TOP VIEW ITEM #2)

SHEET 3 OF 5

RYKO® MFG. CO. U.S.A.
GRIMES,IOWA 50111

DISPLAY ASSY/
12.1" W/HEATERS

MATERIAL	SEE PRODUCT STRUCTURE		
SCALE	NONE	DATE	7/2/08
DRAWN	WEDDLE	CHK'D	RB
APV'D	RB	DATE	7/3/08

REV. A
DWG. NO. 25919–004

FORM #19477–114 REV – 4/14/08

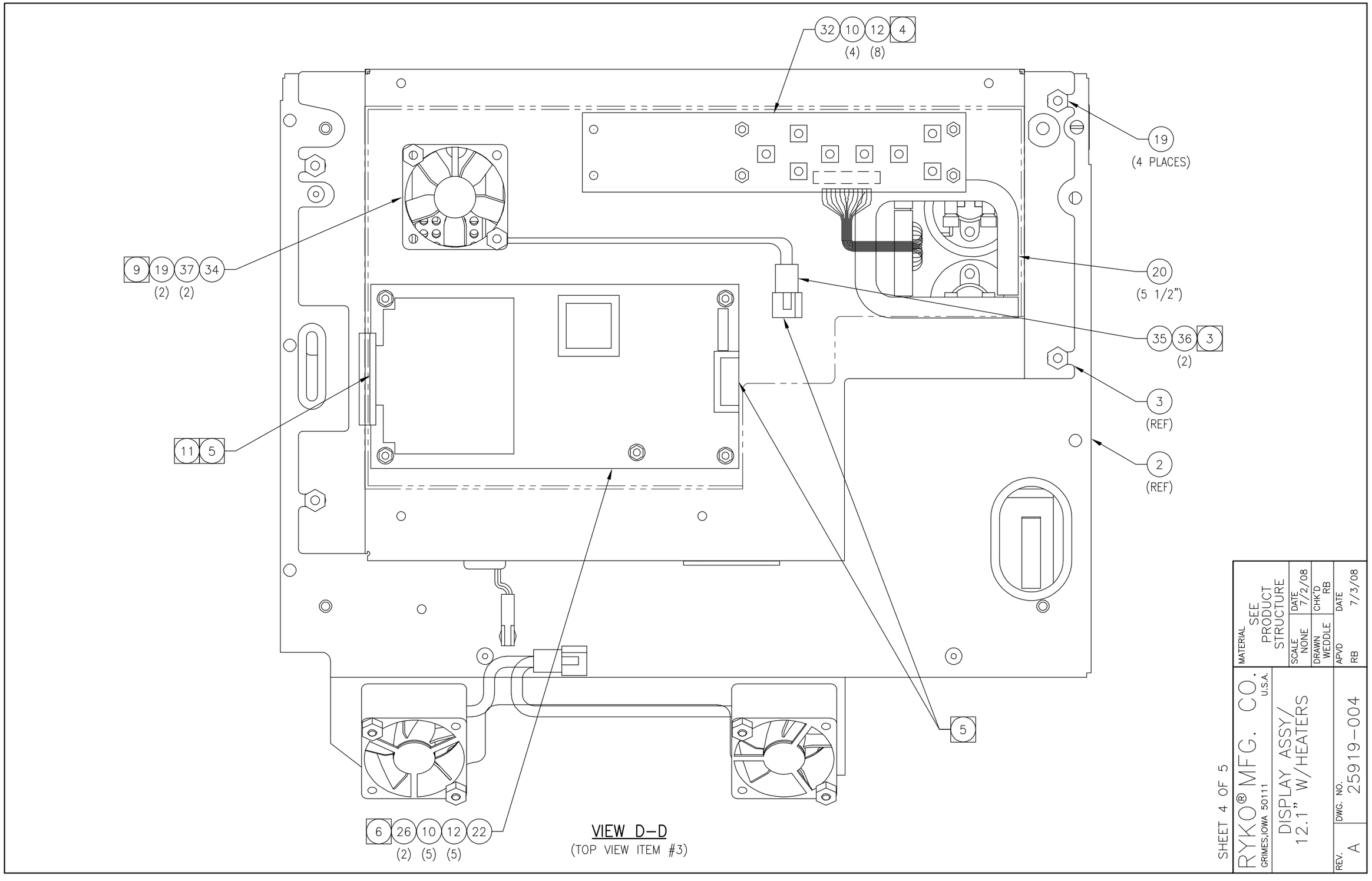
32 10 12 4
(4) (8)
19
(4 PLACES)
9 19 37 34
(2) (2)
20
(5 1/2")
35 36 3
(2)
3
(REF)
11 5
2
(REF)
5
6 26 10 12 22
(2) (5) (5)
VIEW D–D
(TOP VIEW ITEM #3)
FORM #19477–114 REV – 4/14/08
SHEET 4 OF 5
RYKO® MFG. CO.
GRIMES,IOWA 50111 U.S.A.
DISPLAY ASSY/
12.1" W/HEATERS
MATERIAL SEE PRODUCT STRUCTURE
SCALE NONE
DRAWN WEDDLE
DATE 7/2/08
CHK'D RB
APVD RB
DATE 7/3/08
REV. A
DWG. NO. 25919–004

NOTE:

(11) COVER TOP EDGE OF THIS OPENING IN THE TOP COVER (ITEM #4) WITH EDGE TRIM (ITEM #9). △A

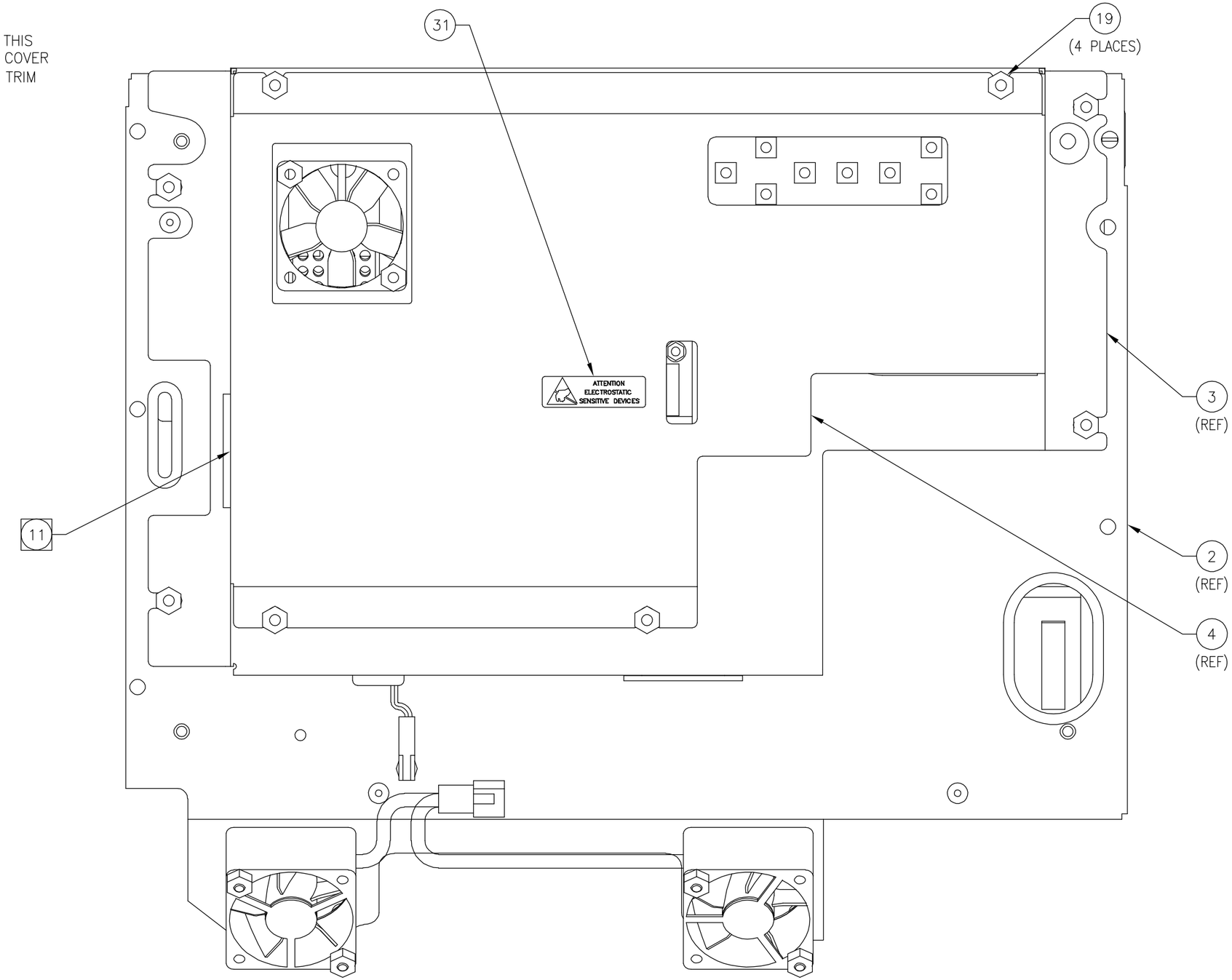

VIEW E-E
(TOP VIEW ITEM #4)

FORM #19477-114 REV - 4/14/08

SHEET 5 OF 5

RYKO® MFG. CO. U.S.A. GRIMES,IOWA 50111	MATERIAL SEE PRODUCT STRUCTURE		
DISPLAY ASSY/ 12.1" W/HEATERS	SCALE NONE	DATE 7/2/08	
	DRAWN WEDDLE	CHK'D RB	
REV. A	DWG. NO. 25919-004	APV'D RB	DATE 7/3/08

CABLE ASSY/BACKLIGHT INVERTER

PART NO. 25914-011 REVISION -

ITEM	QTY.	UOM	PART NO.	DESCRIPTION
1	1	EA	13697-302	CONNECTOR/PLUG,6CKT,.062
2	6	EA	13697-296	CONNECTOR/PIN,MALE,24-18G,.062
3	1	EA	13697-299	CONNECTOR/PLUG,3CKT,.062
5	2	FT	10279-292	WIRE/STRANDED,18GA,300V,YELLOW
6	2	FT	10279-290	WIRE/STRANDED,18GA,300V,BLACK
7	2	FT	10279-291	WIRE/STRANDED,18GA,300V,RED

DWG. NO. 25914–011

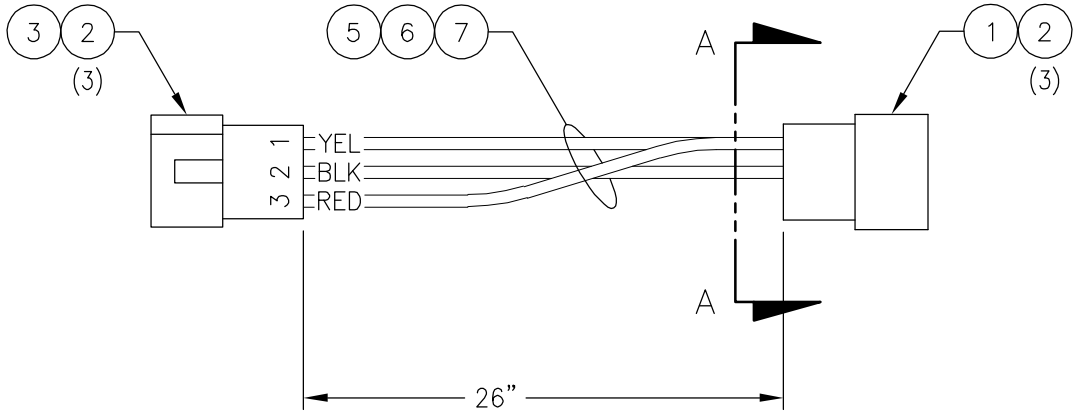

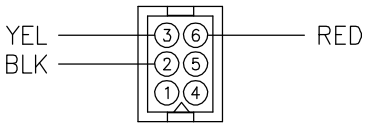

VIEW A–A

LTR	ECO	DESCRIPTION	BY	DATE	APVD
–	0805–063	RELEASING DRAWING	MB	8/30/05	RB

PRODUCT: AMTT CS

TOLERANCES UNLESS OTHERWISE SPECIFIED

1. ALL SPECIFICATIONS SUBJECT TO CHANGE WITHOUT NOTICE.
2. UNLESS OTHERWISE SPECIFIED, ALL DIMENSIONS ARE IN INCHES.

MATERIAL: SEE PRODUCT STRUCTURE

SCALE: NONE | DATE: 8/22/05

DRAWN: BEERENDS | CHK'D: TB/MB

APVD: RB | DATE: 8/30/05

RYKO® MFG. CO.
GRIMES,IOWA 50111 U.S.A.

CABLE ASSY/
BACKLIGHT INVERTER

DWG. NO. 25914–011 | REV. –

FORM #19477–036 REV A 01/18/96

PC CHASSIS ASSY/AMTT CS,1.2

PART NO. 25909-002 REVISION C

ITEM	QTY.	UOM	PART NO.	DESCRIPTION
0	1	EA	70001-004	PUR KIT/AMTT CS,2007
1	1	EA	24989-000	PC CHASSIS/ W/O POWER SUPPLY
2	1	EA	24993-012	CPU CARD/370,PCI BUS
3	1	EA	24990-005	IC/PROCESSOR,CELERON,1.2GHZ
4	1	EA	24986-004	MEMORY CARD/256MEG,DIMM
5	1	EA	25996-003	HARD DRV/FORMATTED,AMTT CS,RN2
8	1	EA	24995-002	CD ROM DRIVE/CDRW,INT
9	1	EA	24993-009	PC CARD/SERIAL,PCI,2 PORT
10	1	EA	24994-000	CABLE/USB
11	6	EA	10005-201	WIRE TIE/4",5/8"MAX DIA
12	1	EA	24993-011	PC CARD/MODEM,PCI,56K
13	1	EA	24993-013	PC CARD/DIG I/O,ATOD,PCI,MOD
14	1	EA	24993-015	PC CARD/ECHELON,PCI,PCLTA
15	1	EA	24988-000	PC SOFTWARE/WIN 2000,LICENSE
16	1	EA	23639-000	LABEL/ESD SENSITIVE,1.5"X.375"
17	1	EA	13620-001	SHOP PROC/PACKAGING OF ESD DEV
18	1	EA	25035-001	BACKPLANE/PC,5-SLOT,PCI
19	1	EA	15544-007	FAN/COOLING,CELERON CPU
20	1	EA	13697-278	CONNECTOR/3.5MM JACK,PLASTIC
21	1	FT	10280-210	WIRE/STRANDED,24GA,WHITE&BLACK
22	2	FT	10280-212	WIRE/STRANDED,24GA,WHITE&RED
23	1	EA	13697-318	CONNECTOR/SKT,8PIN,2MM,FEMALE
24	7	EA	13697-319	CONNECTOR/PIN,2MM,CRIMP
25	1	EA	25882-000	LABEL/"CN",CN1-CN20
27	1	EA	15544-005	FAN/COOLING,24VDC,92MM
28	4	EA	10034-245	SCREW/MACH,#6-32x1-1/2,FH,SS
29	6	EA	10878-202	NUT/ #6-32,NYL INS,ZN PL
30	1	EA	15544-006	FAN GUARD/92MM,FILTER
31	1	EA	13697-298	CONNECTOR/PLUG,2CKT,.062
32	2	EA	13697-296	CONNECTOR/PIN,MALE,24-18G,.062
33	1	EA	26705-000	BRACKET/CABLE MOUNT,PC CHASSIS
34	1	EA	26050-005	CABLE ASSY/ATX EXTENSION,10"
35	2	EA	10034-264	SCREW/MACH,#6-32X3/8,FH,SS

NOTES:

1. REMOVE THE COUNTERSINK SCREWS FROM THE PC CHASSIS COVER AS RECEIVED (ITEM #1). NEXT, REMOVE THE COVER FROM THE PC CHASSIS ENCLOSURE. RETAIN THE SCREWS AND COVER FOR REINSTALLATION LATER.

2. REMOVE THE TWO (2) COUNTERSINK SCREWS FROM THE PC CHASSIS ENCLOSURE THAT HOLDS THE FLIP–UP COVER IN POSITION. RETAIN THESE 2 SCREWS, ALSO, FOR LATER REINSTALLATION. FLIP OPEN THE TOP OF THE PC CHASSIS TO REVEAL THE INSIDE. REMOVE ANY LOOSE CABLES FROM THE INTERIOR. THESE WILL BE INSTALLED IN A LATER STEP. ALSO, REMOVE THE BAG OF FASTENERS AND BLANK PLATES, THE FASTENERS NEED TO BE KEPT FOR MOUNTING HARDWARE INTO THE PC CHASSIS, THE BLANK PLATES CAN BE DISCARDED.

3. INSTALL THE BACKPLANE PC BOARD (ITEM #18) INTO THE BOTTOM OF THE CHASSIS USING THE SCREWS PROVIDED WITH THE PC CHASSIS. ORIENT THE BACKPLANE WITH THE PC SLOTS UP AND IN LINE WITH THE SLOTTED SIDE OF THE CHASSIS AND THE POWER CONNECTORS TO THE LEFT SIDE, AS SHOWN IN VIEW B–B.

4. VERIFY THE JUMPER IS SET TO "MASTER". THEN MOUNT THE HARD DRIVE (ITEM #5) TO THE BACK OF THE CHASSIS USING 4 COUNTERSINK SCREWS PROVIDED WITH THE PC CHASSIS. MAKE SURE THAT THE HARD DRIVE CONNECTORS ARE POINTING UP.

5. CHANGE THE JUMPER SETTING TO "SLAVE". MOUNT THE CD–ROM DRIVE (ITEM #8) TO THE TOP SIDE OF THE FLIP COVER ON THE CHASSIS. ATTACH THE CD–ROM DRIVE USING 4 SCREWS PROVIDED. THE SCREWS ARE INSERTED FROM THE UNDERSIDE OF THE FLIP COVER.

6. INSTALL THE POWER CONNECTORS (ITEM #34) TO THE BACKPLANE (ITEM #18) TO ATX1. REFER TO INSTRUCTIONS SUPPLIED WITH BACKPLANE IF NEEDED. PLUG THE OTHER CABLE ASSEMBLY INTO THE 4 PIN POWER CONNECTOR ON THE BACKPLANE BIG1, THE HARD DRIVE (ITEM #5), THE CD–ROM DRIVE (ITEM #8), AND THE FAN (SUPPLIED WITH THE PC CHASSIS). ROUTE THE CABLE SO THAT THEY WILL ALL REACH PROPERLY AND THE FLIP UP COVER WILL CLOSE WITHOUT PINCHING ANY WIRES. WIRE TIE AS NEEDED TO KEEP A NEAT AND PROFESSIONAL APPEARANCE.

7. THE AUDIO CONNECTOR (ITEM #20) WILL NEED TO BE MOUNTED IN THE BOTTOM OF THE USB CABLE PLATE (ITEM #10). DRILL OR PUNCH A ø5/16"±1/32" HOLE IN THE PLATE, REFER TO DETAIL D FOR HOLE LOCATION. MOUNT THE AUDIO CONNECTOR (ITEM #20) INTO THE PLATE AS SHOWN, REFER TO VIEW E–E. AFTER THE AUDIO CONNECTOR IS MOUNTED SOLDER 10" PIECES OF THE WIRES (ITEM #21 AND #22) TO THE 3 PINS ON THE CONNECTOR PER VIEW E–E. INSTALL PINS (ITEM #24) ONTO THE ENDS OF THE 3 WIRES AND INSERT THE PINS INTO THE PROPER LOCATIONS IN THE CONNECTOR SOCKET (ITEM #23). INSTALL 4 EXTRA PINS INTO THE CONNECTOR WHERE SHOWN IN VIEW F–F TO FACILITATE HOLDING THE CONNECTOR TO THE PC BOARD. TWIST THE WIRES A MINIMUM OF 3 TURNS PER INCH AFTER ASSEMBLY.

8. BEFORE CPU CARD (ITEM #2) IS MOUNTED, SOME ASSEMBLING WILL NEED TO BE DONE FIRST. SEE BELOW FOR CPU CARD ASSEMBLY AND REFER TO DETAIL C.
   1. MOUNT THE CPU PROCESSOR (ITEM #3) ONTO THE CPU CARD (ITEM #2) PER THE INSTRUCTIONS PROVIDED WITH THE PROCESSOR. MAKE SURE TO USE THE PROPER STATIC CONTROL PROCEDURES.
   2. APPLY HEAT SINK COMPOUND SUPPLIED WITH FAN TO THE BACK SIDE OF THE FAN (ITEM #19) AND INSTALL THE FAN TO THE TOP OF THE CPU IC PROCESSOR (ITEM #3) FOLLOWING THE INSTRUCTIONS PROVIDED WITH THE FAN. THEN CONNECT THE FAN TO CN12 ON THE CPU CARD.
   3. ATTACH THE IC MEMORY (ITEM #4) INTO THE SLOT ON THE CPU CARD.
   4. THE CPU CARD (ITEM #2) COMES WITH VARIOUS CABLE ASSEMBLIES FOR VARIOUS CONNECTIONS. LOCATE THE SERIAL CABLE AND CONNECT INTO THE CPU CARD AT CN8. LOCATE THE PARALLEL CABLE AND CONNECT INTO THE CPU CARD AT CN7. LOCATE THE HARD DRIVE CABLE AND CONNECT INTO THE CPU CARD AT CN15. MAKE SURE THAT THE RED STRIPED SIDE OF THE CABLES ARE ORIENTED ON PIN #1 SIDE OF CONNECTORS. PIN #1 IS THE PIN ON TOP WHEN THE CARD IS IN THE CHASSIS ASSY. LOCATE THE USB CABLE (ITEM #10) AND CONNECT INTO THE CPU CARD AT CN9. LOCATE THE AUDIO WIRING ASSEMBLY (AFTER ASSEMBLED WITH USB CABLE) AND CONNECT INTO THE CPU CARD AT CN17. FOR HELP LOCATING THE CPU CARD CONNECTOR LOCATIONS AND CABLE INFORMATION REFER TO THE STARTUP MANUAL PROVIDED WITH THE CARD. ALSO, REFER TO NOTE #17 FOR CABLE INFO.

9. INSTALL THE CPU PC BOARD ASSEMBLY INTO THE "MASTER SLOT" OF THE BACKPLANE. INSTALL THE USB CONNECTOR PLATE INTO THE FAR RIGHT SLOT. SECURE BOTH PLATES TO THE CHASSIS USING THE PANHEAD SCREWS WITH A STAR WASHER SUPPLIED WITH THE PC CHASSIS.

10. INSTALL THE OTHER PC CARDS INTO THE CHASSIS REFER TO VIEW A–A AND VIEW B–B. THERE ARE NO JUMPER CHANGES NEEDED ON ANY OF THESE PC CARDS. SECURE THE PLATES TO THE CHASSIS USING THE PANHEAD SCREWS WITH A STAR WASHER SUPPLIED WITH THE PC CHASSIS.

11. AFTER INSTALLING ALL THE PC CARDS THE CABLE AND WIRE ASSEMBLIES NEED ROUTED.
   1. LOOP THE SERIAL AND PARALLEL CONNECTOR CABLES FROM THE CPU PC BOARD OVER THE TOP OF ALL THE PC BOARDS. INSTALL THE CONNECTORS WHERE SHOWN IN VIEW A–A USING THE HEX STANDOFFS TO FASTEN THE CONNECTORS.
   2. CONNECT THE HARD DRIVE CABLE TO THE HARD DRIVE. THEN ROUTE THE OTHER CONNECTOR ON THE CABLE ASSEMBLY TO THE CD–ROM DRIVE BEING SURE THE CABLE STAYS WITHIN THE PC CHASSIS AND THAT IT WILL NOT BE PINCHED WHEN FLIP UP COVER CLOSES. MAKING SURE THAT THE RED STRIPED SIDE OF THE CABLE IS ORIENTATED ON PIN #1 OF HARD DRIVE AND CD–ROM DRIVE.

12. LABELS NEED TO BE ADDED TO THE FLAT SURFACE ON THE FRONT OF THE PC CHASSIS ABOVE THE SLOTS AND BELOW THE FLIP TOP. ADJUST THE LOCATION OF THE LABELS IF NEEDED TO ENSURE LABELS DO NOT COVER EACH OTHER.
   1. THE MICROSOFT WINDOWS "CERTIFICATE OF AUTHENTICITY" LABEL (ITEM #15) SHOULD BE ATTACHED ON THE LEFT SIDE APPROXIMATELY CENTERED FROM TOP TO BOTTOM.
   2. THE "ATTENTION ELECTROSTATIC SENSITIVE DEVICES" LABEL (ITEM #16) SHOULD BE ATTACHED APPROXIMATELY CENTERED FROM LEFT TO RIGHT AND FROM TOP TO BOTTOM.

LTR	ECO	DESCRIPTION	BY	DATE	APVD
C	0907–050	REP ITEM 5	WD	9/21/07	RB
B	0707–094	REV NOTE 6	KS	8/16/07	RB
A	0206–061	REPLACE ITEM #5 ON P/S	KS	6/27/06	RB
–	0606–012	RELEASING DRAWING	TB	6/8/06	RB

PRODUCT: AMTT CS

TOLERANCES UNLESS OTHERWISE SPECIFIED

1. ALL SPECIFICATIONS SUBJECT TO CHANGE WITHOUT NOTICE.
2. UNLESS OTHERWISE SPECIFIED, ALL DIMENSIONS ARE IN INCHES.

MATERIAL: SEE PRODUCT STRUCTURE

SCALE: NONE — DATE: 6/6/06

DRAWN: TB — CHK'D: TB/SM

APVD: RB — DATE: 6/8/06

RYKO® MFG. CO. U.S.A.
GRIMES,IOWA 50111

PC CHASSIS ASSY/ AMTT CS,1.2

REV. C — DWG. NO. 25909–002

SHEET 1 OF 4

FORM #19477–037 REV B 01/20/97

NOTES:

13. THE RESET SWITCH, THAT CAME MOUNTED IN THE CHASSIS (ITEM #1) IS NOT BEING USED AT THIS TIME. WIRE TIE AS NEEDED AND TUCK TO THE BOTTOM OF THE CHASSIS TO KEEP A NEAT AND PROFESSIONAL APPEARANCE. CONNECT GREEN LED FROM CHASSIS (ITEM #1) TO POWER HEADER J18 OF CPU BOARD (ITEM #2). CONNECT YELLOW LED FROM CHASSIS (ITEM #1) TO HDD HEADER J7 OF CPU BOARD (ITEM #2). REFER TO DETAIL G.

14. CLOSE THE FLIP-UP COVER. CHECK TO ENSURE NO WIRES OR CABLES ARE BEING PINCHED OR HANGING OUT OF THE CHASSIS. SECURE THE FLIP-UP COVER USING TWO (2) OF THE SCREWS REMOVED EARLIER. SECURE THE COVER USING THE SCREWS REMOVED EARLIER.

15. ADD THE "CN" LABELS TO THE PC CHASSIS ASSEMBLY REFER TO VIEW A-A FOR CONNECTOR LOCATIONS. PLACE LABELS ON THE ENCLOSURE, CENTERED AND TO THE RIGHT (OR BELOW) OF THE CONNECTOR. AFTER LABELS ARE ADDED TO ASSEMBLY, TAPE THE REMAINDER OF THE LABELS FACE DOWN TO THE TOP OF THE CHASSIS COVER FOR FUTURE ASSEMBLIES.

16. PLUG "Y CONNECTOR" FROM PC BOARD IN HERE.

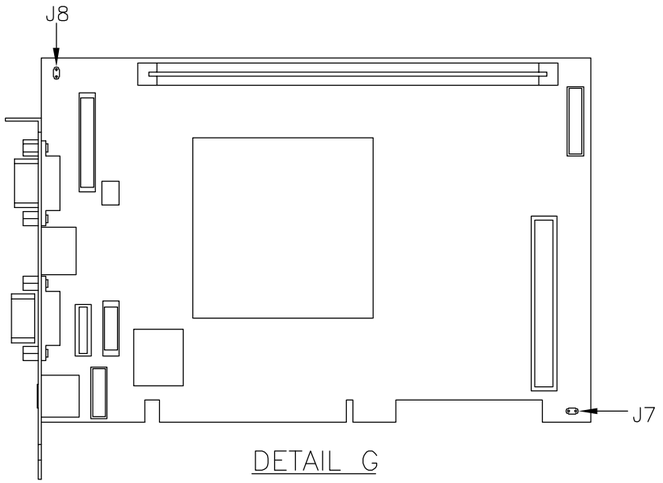

DETAIL G

17. BELOW ARE SOME OF THE CABLES INCLUDED WITH THE CPU CARD (ITEM #1) TO HELP IDENTIFY THOSE NEEDED DURING THIS ASSEMBLY.

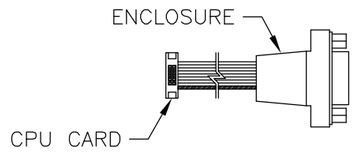

SERIAL PORT CABLE
(MANUFACTURER'S P/N 1700100250)

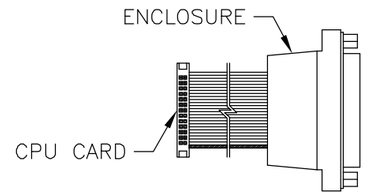

PARALLEL PORT CABLE
(MANUFACTURER'S P/N 1700260250)

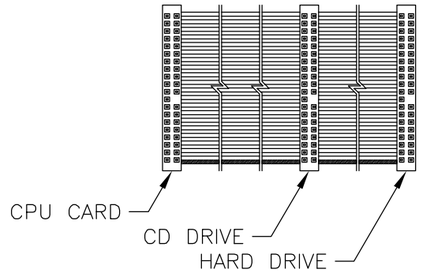

HARD DISK DRIVE (IDE)
INTERFACE CABLE (40-PIN)
(MANUFACTURER'S P/N 1701400452)

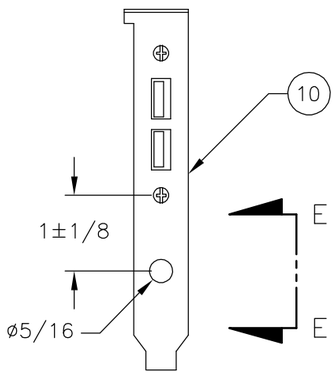

DETAIL D (7)
(ENLARGED FOR CLARITY)

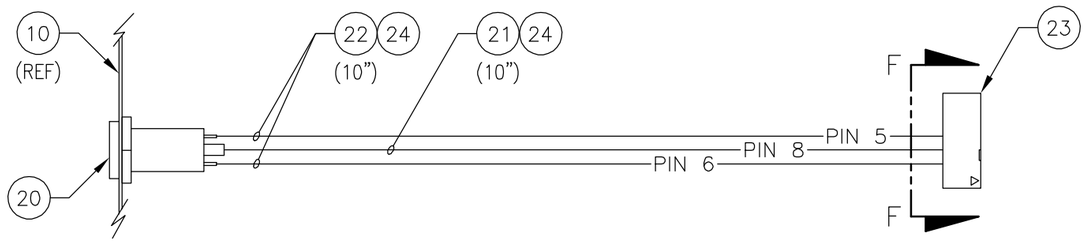

VIEW E-E (7)
(ENLARGED FOR CLARITY)

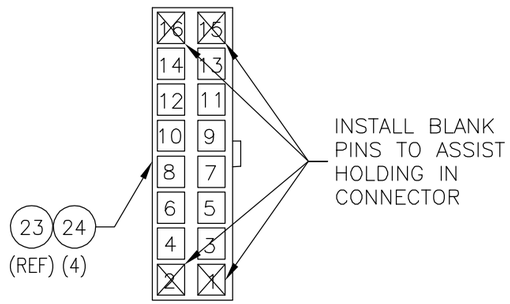

VIEW F-F (7)
(ENLARGED FOR CLARITY)

LTR	ECO	DESCRIPTION	BY	DATE	APVD
C	0907-050	REP ITEM 5	WD	9/21/07	RB
B	0707-094	REV NOTE 13 AND ADD DETAIL G	KS	8/16/07	RB
A	0206-061	SEE SHEET 1	KS	6/27/06	RB
-	0606-012	RELEASING DRAWING	TB	6/8/06	RB

PRODUCT: AMTT CS

TOLERANCES UNLESS OTHERWISE SPECIFIED

1. ALL SPECIFICATIONS SUBJECT TO CHANGE WITHOUT NOTICE.
2. UNLESS OTHERWISE SPECIFIED, ALL DIMENSIONS ARE IN INCHES.

MATERIAL: SEE PRODUCT STRUCTURE

SCALE: NONE — DATE: 6/6/06
DRAWN: TB — CHK'D: TB/SM
APV'D: RB — DATE: 6/8/06

RYKO® MFG. CO.
GRIMES,IOWA 50111 U.S.A.

PC CHASSIS ASSY/ AMTT CS,1.2

REV. C — DWG. NO. 25909-002

SHEET 2 OF 4

FORM #19477-037 REV B 01/20/97

NOTES:

(18) CONNECT THE WIRES FROM FAN (ITEM #27) TO CONNECTOR AND PINS (ITEM #31&#32). THE RED WIRE IS TO BE PIN #1, AND THE BLACK WIRE IS TO BE PIN #2. BEFORE ATTACHING THE FAN GUARD (ITEM #30) REMOVE THE FILTER AND DISCARD.

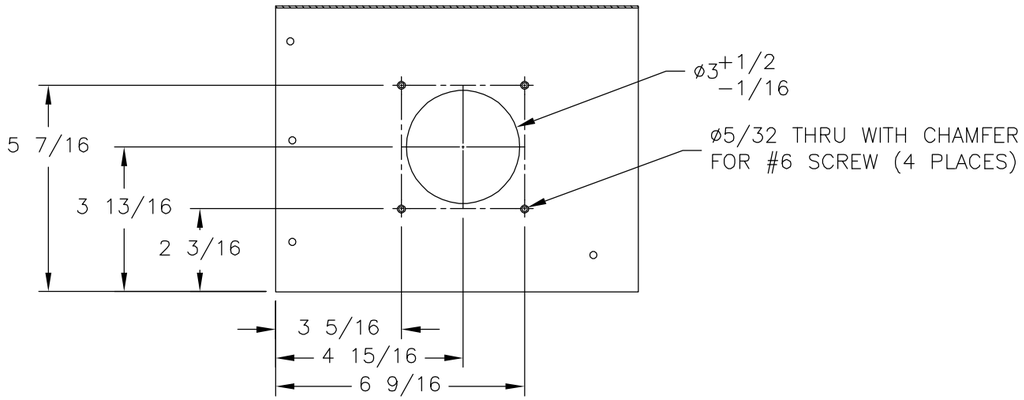

VIEW H–H
(PC CHASSIS COVER SHOWN)

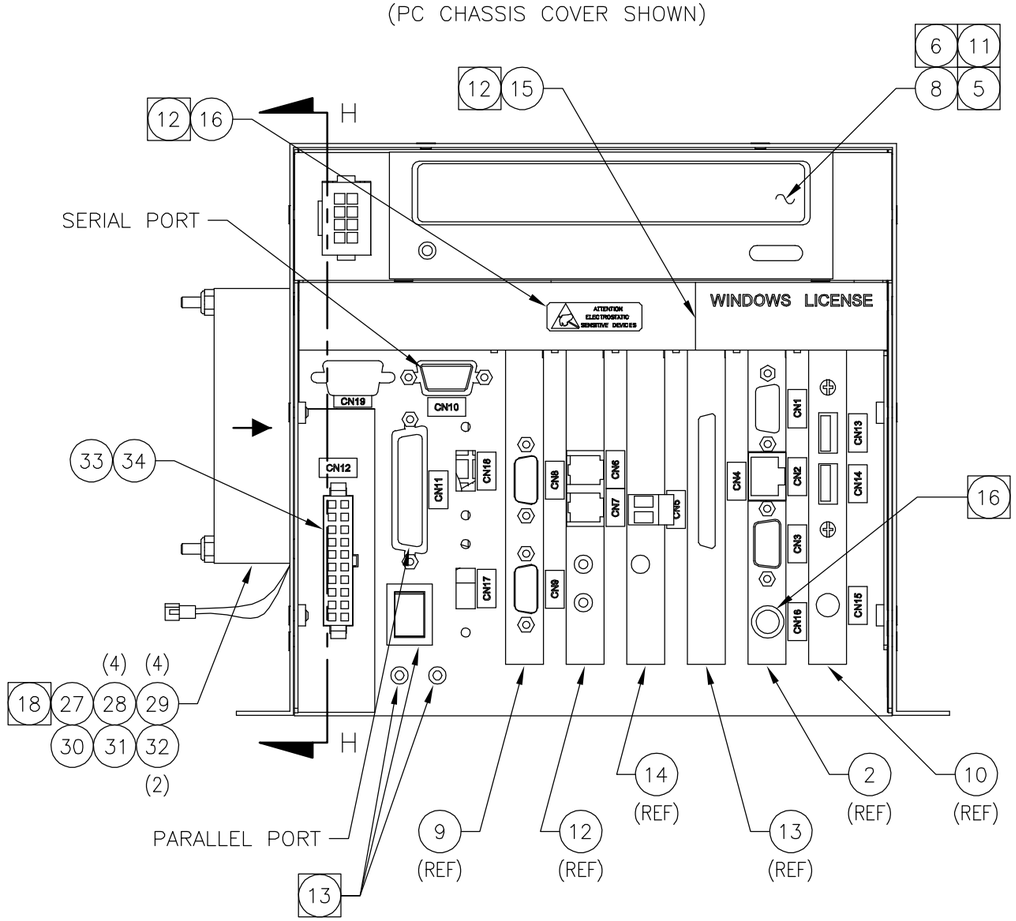

VIEW A–A

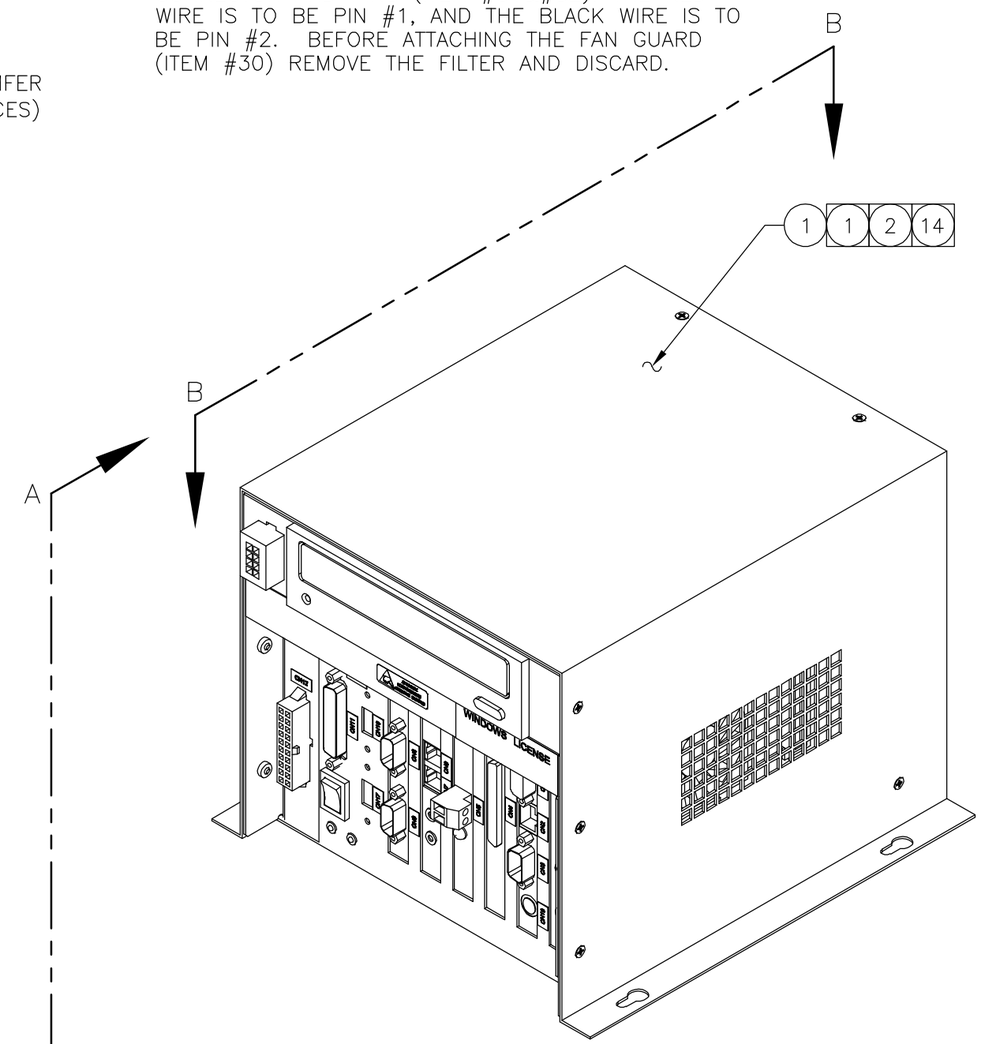

LTR	DESCRIPTION	DATE	APVD
C	0907–050 REP ITEM 5	9/21/07	RB
B	0707–094 REFER TO OTHER SHEETS	8/16/07	RB
A	0206–061 SEE SHEET 1	6/27/06	RB
–	0606–012 RELEASING DRAWING	6/8/06	RB
	ECO	BY	

PRODUCT
AMTT CS

TOLERANCES
UNLESS OTHERWISE SPECIFIED

MATERIAL
SEE PRODUCT STRUCTURE

SCALE NONE | DATE 6/6/06
DRAWN TB | CHK'D TB/SM
APVD RB | DATE 6/8/06

1. ALL SPECIFICATIONS SUBJECT TO CHANGE WITHOUT NOTICE.
2. UNLESS OTHERWISE SPECIFIED, ALL DIMENSIONS ARE IN INCHES.

RYKO® MFG. CO. U.S.A.
GRIMES,IOWA 50111

PC CHASSIS ASSY/ AMTT CS,1.2

REV. C | DWG. NO. 25909–002

SHEET 3 OF 4

FORM #19477–037 REV B 01/20/97

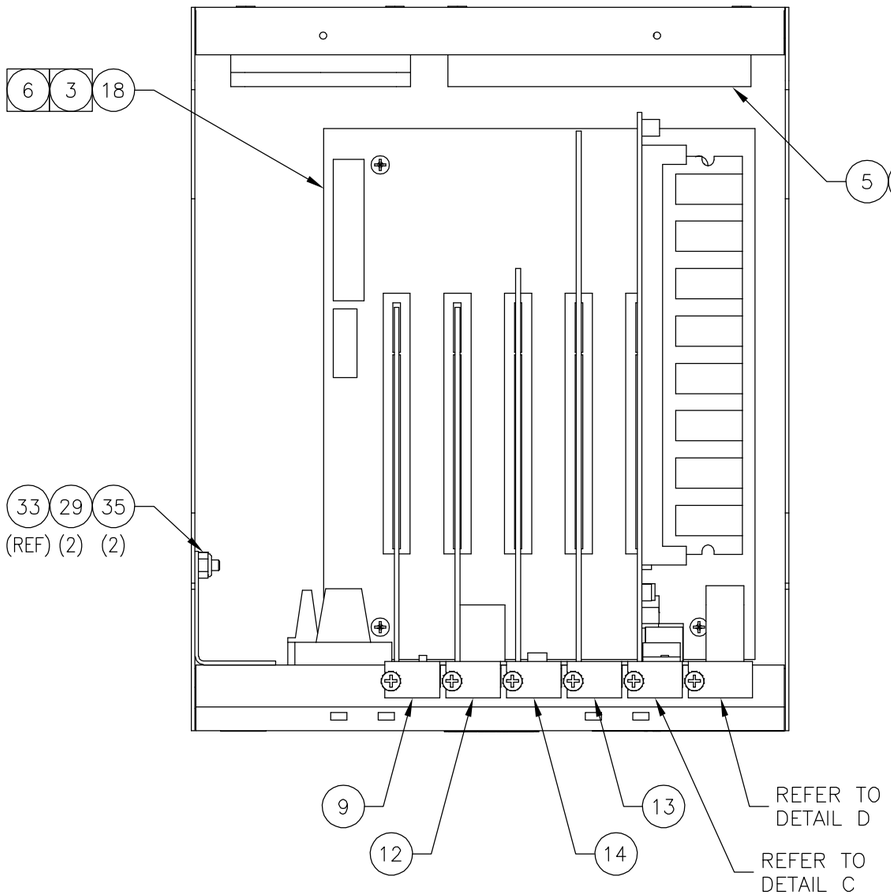

VIEW B–B
(ENLARGED FOR CLARITY)
(SOME ITEMS REMOVED TO SEE INSIDE CHASSIS)

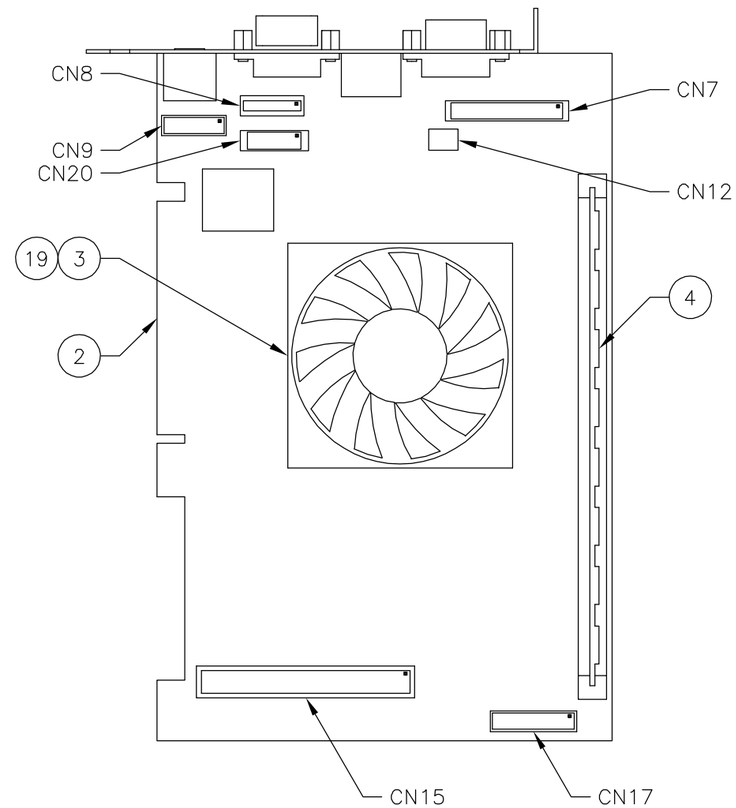

DETAIL C (8)
(ENLARGED FOR CLARITY)

LTR	DESCRIPTION	BY	DATE	APVD
C	0907–050 REP ITEM 5	WD	9/21/07	RB
B	0707–094 REFER TO OTHER SHEETS	KS	8/16/07	RB
A	0206–061 SEE SHEET 1	KS	6/27/06	RB
–	0606–012 RELEASING DRAWING	TB	6/8/06	SM

PRODUCT
AMTT CS

TOLERANCES
UNLESS OTHERWISE SPECIFIED

MATERIAL SEE PRODUCT STRUCTURE
SCALE NONE
DRAWN TB
DATE 6/6/06
CHK'D TB/SM
APVD RB
DATE 6/8/06

1. ALL SPECIFICATIONS SUBJECT TO CHANGE WITHOUT NOTICE.
2. UNLESS OTHERWISE SPECIFIED, ALL DIMENSIONS ARE IN INCHES.

RYKO® MFG. CO. U.S.A.
GRIMES,IOWA 50111

PC CHASSIS ASSY/ AMTT CS,1.2

REV. C
DWG. NO. 25909–002

SHEET 4 OF 4

FORM #19477–037 REV B 01/20/97

COIN BOX INTFC ASSY/AMTT CS

PART NO. 15477-009 REVISION B

ITEM	QTY.	UOM	PART NO.	DESCRIPTION
1	1	EA	23994-000	ENCLOSURE/CPU,CUSTOM
2	1	EA	21205-003	PCB ASSY/IO MODULE,COLOR AMTT
5	1	EA	25883-001	LABEL/INTERFACE,AMTT CS
6	1	EA	25893-000	PLATE/INTERFACE
7	1	EA	23997-000	PLATE/CPU BOX,MOUNTING
8	2	EA	10034-238	SCREW/MACH,#4-40x3/4,FH,SS
10	1	EA	14807-013	RESISTOR/ADJ,10K AUDIO,PANEL
11	1	EA	19794-001	KNOB/BLACK,BLUE STRIPE
12	1	EA	13697-278	CONNECTOR/3.5MM JACK,PLASTIC
13	5	FT	10280-210	WIRE/STRANDED,24GA,WHITE&BLACK
14	1	EA	13697-134	CONNECTOR/HOUSING,FEM,2PIN,POL
15	2	EA	13697-133	CONNECTOR/CRIMP TERMINALS,.25
16	1	EA	23639-000	LABEL/ESD SENSITIVE,1.5"X.375"
18	3	EA	13697-285	CONNECTOR/PANEL MT CLIP,3 PIN
19	3	EA	13697-286	CONNECTOR/HOUSING,MALE,3 PIN
20	9	EA	13697-287	CONNECTOR/CRIMP PINS,MALE
50	1	EA	01254-000	TEST PROC/AMTT CS I/O MODULE

NOTES:

1. MAKE AN EMPTY BOX ASSEMBLY BY:
   1. REMOVE AND DISCARD THE SCREWS AND ALUMINUM PLATE WHICH CAME WITH THE ENCLOSURE FROM ONE END OF THE ENCLOSURE (ITEM #1).
   2. INSTALL THE MOUNT PLATE (ITEM #7) TO THE END OF THE ENCLOSURE AND SECURE IT TO THE ENCLOSURE WITH 2 FLAT HEAD SCREWS (ITEM #8). MAKING SURE THAT THE PLASTIC END OF THE BOX IS INSERTED BETWEEN THE METAL PIECES.
   3. REMOVE THE SCREWS AND ALUMINUM PLATE WHICH CAME ON THE OPPOSITE END OF THE ENCLOSURE (ITEM #1). SAVE THESE 2 SCREWS, BUT DISCARD THE ALUMINUM PLATE.
2. MAKE UP WIRE ASSEMBLIES AS SHOWN IN DETAILS B, C, AND D. SOLDERING WIRES TO THE PINS. (A)
3. INSTALL THE LABEL (ITEM #5) TO THE OUTSIDE OF THE PLATE (ITEM #6). CUT OUT ALL HOLES WITH A SHARP KNIFE.
4. CONNECT TWO 8" WIRES TO THE AUDIO CONNECTOR (ITEM #12) AS SHOWN (DO NOT CONNECT TO THE BRASS PIN). INSTALL THE PINS (ITEM #15) ON THE ENDS OF THE WIRES, BUT DO NOT INSTALL THE 2 PIN CONNECTOR TO THE WIRES UNTIL THE CONNECTOR IS MOUNTED INTO THE STAINLESS PLATE (ITEM #6). (THE CONNECTOR WILL NOT FIT THROUGH THE HOLE FOR THE AUDIO JACK).
5. SOLDER THE WIRES FROM THE POTENTIOMETER (DETAIL C) TO THE PC BOARD (ITEM #2) REFER TO DETAIL C FOR WIRE NUMBER AND DETAIL E FOR PIN NUMBERS ON BOARD. THEN MOUNT THE POTENTIOMETER TO THE PLATE (ITEM #6) IN THE APPROPRIATE LOCATION.
6. SOLDER THE WIRES FROM THE TEMP AND LIGHT SENSORS (DETAIL B) TO THE PC BOARD (ITEM #2) REFER TO DETAIL B FOR WIRE NUMBER AND DETAIL E FOR PIN NUMBERS ON BOARD. THEN MOUNT THE CONNECTOR TO THE PLATE (ITEM #6) IN THE APPROPRIATE LOCATIONS.
7. MOUNT THE AUDIO CONNECTOR (ITEM #12) TO THE PLATE (ITEM #6) IN THE APPROPRIATE LOCATION. TURN KNOB COUNTER CLOCKWISE TO THE OFF POSITION AND ATTACH THE KNOB (ITEM #11). THEN INSTALL WIRE PINS INTO THE 2 PIN CONNECTOR AND PLUG THE CONNECTOR INTO THE PC BOARD (ITEM #2).
8. SLIDE THE PC BOARD AND THE BACK PLATE ASSEMBLY INTO THE ENCLOSURE. MAKE SURE THAT THE CPU BOARD SLIDES INTO THE SLOT ON BOTH SIDES OF THE ENCLOSURE NEAR THE SCREW LOCATIONS. MAKE SURE THAT THE PLASTIC BEZEL RING, WHICH IS PART OF THE ENCLOSURE IS PROPERLY INSTALLED AND SEATED AFTER THE BOARD AND PLATE ARE INSTALLED. SECURE THE BACK PLATE TO THE ENCLOSURE WITH THE 2 SCREWS REMOVED PREVIOUSLY. MAKE SURE NOT TO DISTORT THE LABEL WHEN TIGHTENING THE SCREWS.
9. KNOB (ITEM #11) SHOWN IN POSITION WITH POTENTIOMETER TURNED COMPLETELY COUNTER CLOCKWISE.

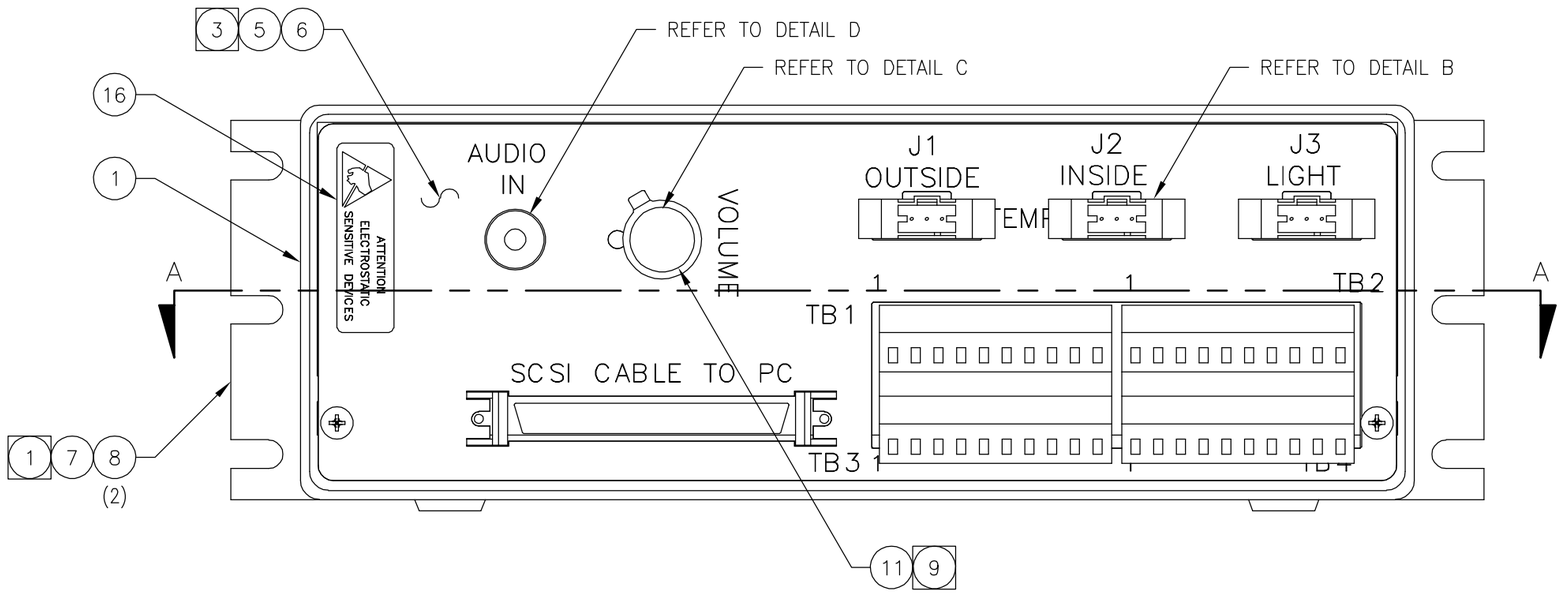

LTR	DESCRIPTION	BY	DATE	APVD
B	0504-133 ECO ADDED TEST PROCEDURE	AM	8/25/04	RB
A	0204-091 REVISED NOTE 2	MB	2/23/04	RB
–	1203-023 RELEASING DRAWING	LE	1/13/04	RB

PRODUCT: AMTT CS

TOLERANCES UNLESS OTHERWISE SPECIFIED

1. ALL SPECIFICATIONS SUBJECT TO CHANGE WITHOUT NOTICE.
2. UNLESS OTHERWISE SPECIFIED, ALL DIMENSIONS ARE IN INCHES.

MATERIAL: SEE PRODUCT STRUCTURE

SCALE: NONE | DRAWN: LE | DATE: 12/2/03 | CHK'D: AM/RB | APVD: RB | DATE: 1/13/04

SHEET 1 OF 2

RYKO® MFG. CO. U.S.A.
GRIMES,IOWA 50111

COIN BOX INTFC ASSY/AMTT CS

REV. B | DWG. NO. 15477-009

FORM #19477-037 REV B 01/20/97

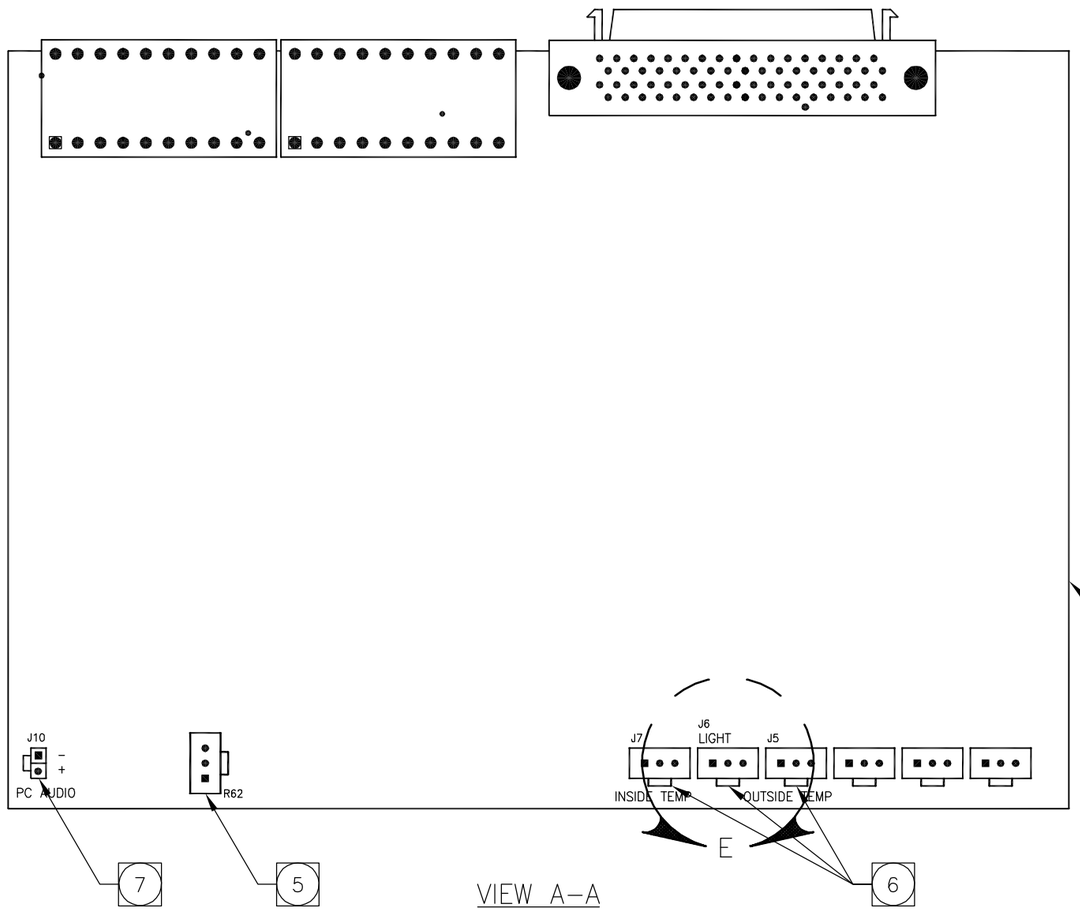

VIEW A–A

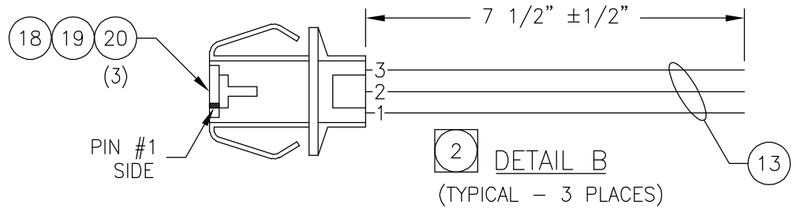

DETAIL B
(TYPICAL – 3 PLACES)

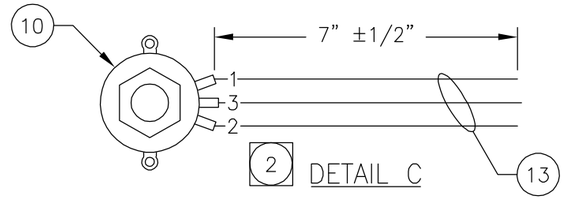

DETAIL C

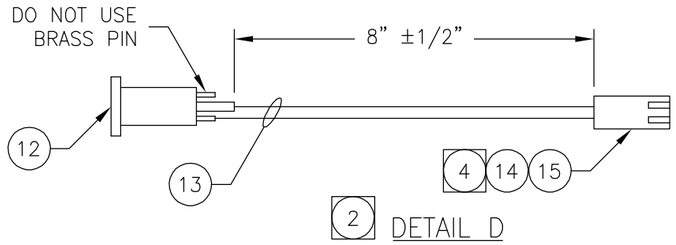

DETAIL D

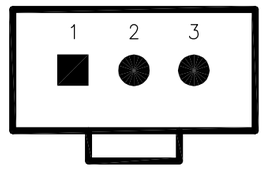

DETAIL E

LTR	ECO	DESCRIPTION	BY	DATE	APVD
B	0504–133	ADDED TEST PROCEDURE	AM	8/25/04	RB
A	0204–091	REFER TO OTHER SHEET	MB	2/23/04	RB
–	1203–023	RELEASING DRAWING	LE	1/13/04	RB

FORM #19477–037 REV B 01/20/97

PRODUCT: AMTT CS

TOLERANCES UNLESS OTHERWISE SPECIFIED

1. ALL SPECIFICATIONS SUBJECT TO CHANGE WITHOUT NOTICE.
2. UNLESS OTHERWISE SPECIFIED, ALL DIMENSIONS ARE IN INCHES.

MATERIAL: SEE PRODUCT STRUCTURE

SCALE: NONE | DRAWN: LE | DATE: 12/2/03 | CHK'D: AM/RB | APVD: RB | DATE: 1/13/04

RYKO® MFG. CO. U.S.A.
GRIMES,IOWA 50111

COIN BOX INTFC
ASSY/AMTT CS

REV. B | DWG. NO. 15477–009

SHEET 2 OF 2

MDB CABLE HARNESS/AMTT CS

PART NO. 25602-001 REVISION D

ITEM	QTY.	UOM	PART NO.	DESCRIPTION
1	1	EA	15447-034	PCB ASSY/MDB TO 232 CONVERTOR
2	1	EA	13697-308	CONNECTOR/RCPT,6CKT,.062
3	6	EA	13697-297	CONNECTOR/SOCKET,FEMALE,.062
4	1	EA	13697-049	CONNECTOR CLAMP/9 PIN D-SUB
5	1	EA	13697-089	CONNECTOR HOUSING/9 PIN D-SUBF
6	1	EA	13697-020	CONNECTOR RETAINER/MALE SCREW
7	5	EA	13697-096	CONNECTOR SOCKET/CRP,D SUBMIN
8	1	FT	15033-000	TUBING/HEAT SHRINK,1-1/4"OD
9	2	EA	10005-201	WIRE TIE/4",5/8"MAX DIA
10	4	FT	10279-294	WIRE/STRANDED,18GA,300V,ORANGE
11	4	FT	10279-290	WIRE/STRANDED,18GA,300V,BLACK
12	4	FT	14685-003	CABLE/5 CONDUCTOR,22GA STRD
14	2	EA	15483-003	MOUNTING PAD/CABLE,ADHESIVE
15	1	EA	10384-001	TAPE/ELECTRICAL,3/4",RED

NOTES:

1. TRIM 1" OF THE OUTER COATING OFF OF BOTH ENDS OF THE CABLE (ITEM #12). SOLDER WIRES TO PC BOARD (ITEM #1) WHERE SHOWN IN DETAIL A. INSTALL PINS (ITEM #3) TO THE OTHER ENDS OF THE WIRES AND INSERT THE PINS INTO THE PROPER LOCATIONS IN CONNECTOR (ITEM #2) PER THE TABLE BELOW.

PIN NUMBER	1	2	3	4	5	6
WIRE COLOR	GRN	BLK	N/C	WHT	RED	BRN

2. TRIM 1" OF THE OUTER COATING OFF OF BOTH ENDS OF THE CABLE (ITEM #12). SOLDER WIRES TO PC BOARD (ITEM #1) WHERE SHOWN IN DETAIL A. CRIMP AND SOLDER ON THE PINS (ITEM #7) TO THE OTHER ENDS OF THE WIRES. INSERT THE PINS INTO THE DB-9 CONNECTOR (ITEM #5) IN THE LOCATIONS PER THE TABLE BELOW. INSTALL THE RETAINER SCREWS (ITEM #6) TO THE DB-9 HOUSING.

PIN NUMBER	1	2	3	4	5	6	7	8	9
WIRE COLOR	N/C	GRN	BRN	N/C	BLK	N/C	WHT	RED	N/C

3. INSTALL THE CLAMP (ITEM #4) USING THE 90° EXIT ON THE CLAMP. USE PLUG TO CLOSE UP THE BACK OF THE CLAMP. USE THE PROPER CLAMPING PIN TO SECURE THE CABLE IN THE CLAMP. CABLE NEEDS TO EXITS IN THE DIRECTION SHOWN IN RELATION TO THE PIN NUMBERS.
4. AFTER WIRING THE ASSEMBLY, SLIP IT INSIDE THE HEAT SHRINK TUBING (ITEM #8). SHRINK THE TUBING DOWN AND CLOSE THE ENDS WITH WIRE TIES (ITEM #9). USE THE SAME WIRE TIES TO ALSO ATTACH THE MOUNT PADS.
5. LABEL BLACK WIRE 725 (ITEM #11) AND ORANGE WIRE 767 (ITEM #10). △C△D△
6. PLACE RED ELECTRICAL TAPE (ITEM #15) AROUND CABLE NEAR CONNECTOR.

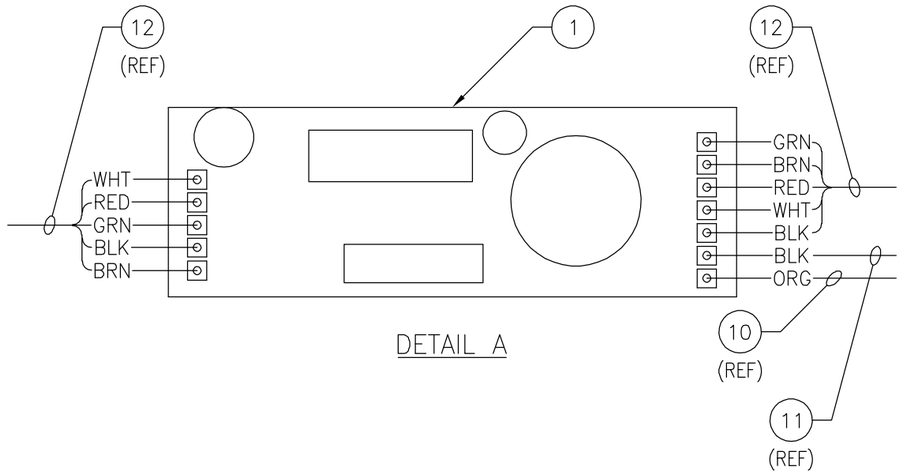

DETAIL A

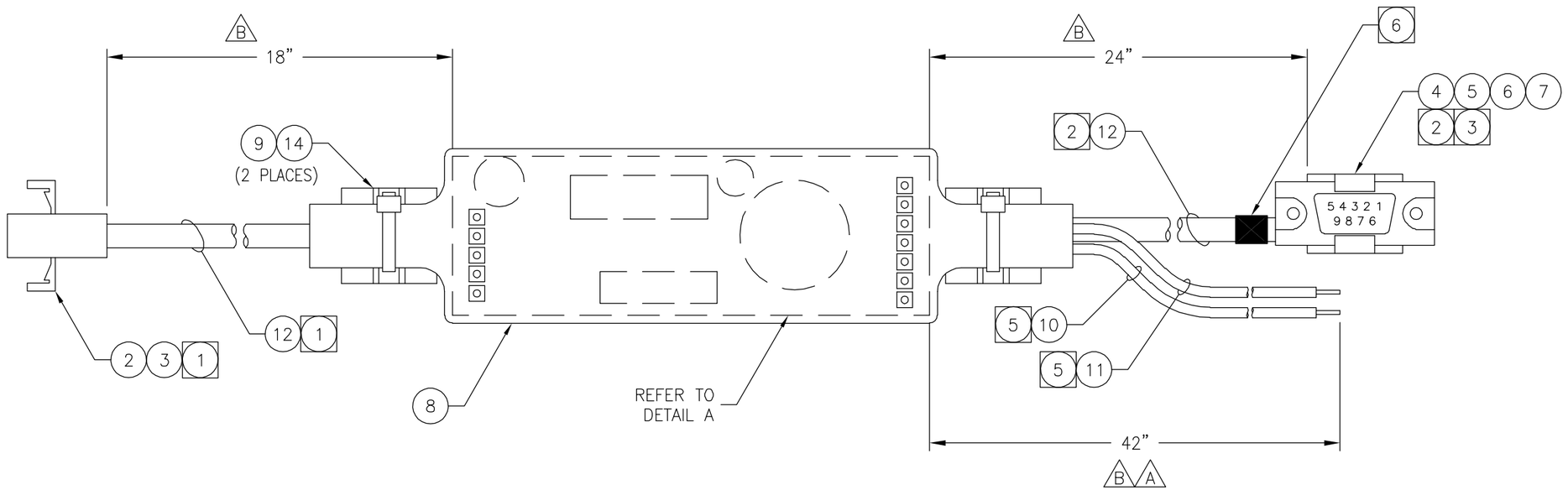

LTR	ECO	DESCRIPTION	BY	DATE	APVD
D	1204-109	CORRECTED DOC ERROR NOTE #5	MB	12/29/04	RB
C	0904-098	REV WIRE NUMBER 727 TO 767	MB	9/27/04	RB
B	0604-097	REV WIRE LENGTH	MB	6/29/04	RB
A	0504-031	REV WIRE LENGTH	AM	5/10/04	RB
–	1103-058	RELEASING DRAWING	MB	11/25/03	RB

FORM #19477-037 REV B 01/20/97

PRODUCT: AMTT CS

TOLERANCES UNLESS OTHERWISE SPECIFIED
LOCATIONS: ±2"

MATERIAL: SEE PRODUCT STRUCTURE
SCALE: NONE
DRAWN: BEERENDS DATE 11/13/03
CHK'D: TB/SM
APVD: RB DATE 11/25/03

1. ALL SPECIFICATIONS SUBJECT TO CHANGE WITHOUT NOTICE.
2. UNLESS OTHERWISE SPECIFIED, ALL DIMENSIONS ARE IN INCHES.

RYKO® MFG. CO. U.S.A.
GRIMES,IOWA 50111

MDB CABLE HARNESS/ AMTT CS

DWG. NO. 25602-001
REV. D

CABLE ASSY/CONN BRKT,PRINTER

PART NO. 26050-002 REVISION C

ITEM	QTY.	UOM	PART NO.	DESCRIPTION
1	1	EA	13697-305	CONNECTOR/RCPT,3CKT,.062
2	2	EA	13697-297	CONNECTOR/SOCKET,FEMALE,.062
3	1	EA	14978-003	PCB ASSY/DIODE POWER SUPPLY
6	2	FT	10279-290	WIRE/STRANDED,18GA,300V,BLACK
7	2	FT	10279-293	WIRE/STRANDED,18GA,300V,BLUE

DWG. NO. 26050–002

WIRING CHART				
FROM	TO	USING	WIRE #	LENGTH
ITEM #1–P1	ITEM #3–P1	ITEM #7 BLUE	728	24"
ITEM #1–P2	ITEM #3–P2	ITEM #6 BLACK	725	24"

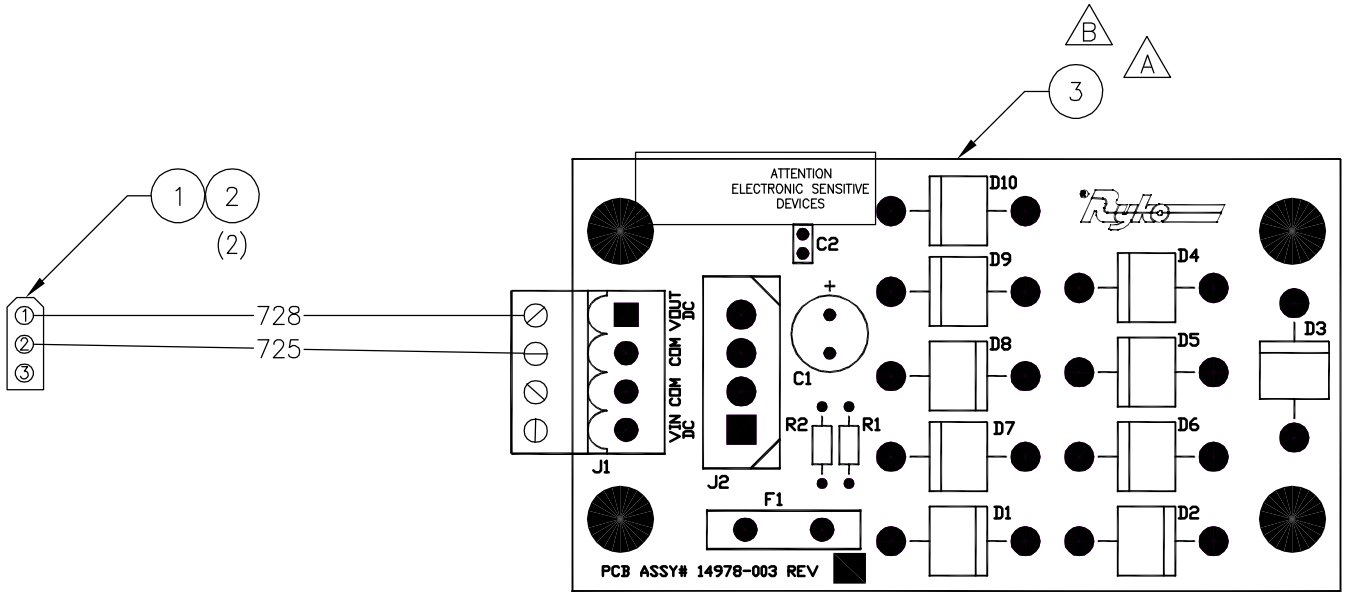

LTR	ECO	DESCRIPTION	BY	DATE	APVD
C	0904–098	REPLACED WIRE (ITEM #6 & #7)	MB	9/27/04	RB
B	0504–031	UPDATE TO NEW ITEM 3	AM	5/10/04	RB
A	0404–043	REV TO USE NEW POWER SUPPLY	MB	4/20/04	RB
–	0104–102	RELEASING DRAWING	MB	2/2/04	RB

PRODUCT: AMTT CS

TOLERANCES UNLESS OTHERWISE SPECIFIED

1. ALL SPECIFICATIONS SUBJECT TO CHANGE WITHOUT NOTICE.
2. UNLESS OTHERWISE SPECIFIED, ALL DIMENSIONS ARE IN INCHES.

MATERIAL: SEE PRODUCT STRUCTURE

SCALE: NONE | DATE: 1/26/04
DRAWN: BEERENDS | CHK'D: DC/MB/RB
APVD: RB | DATE: 2/2/04

RYKO® MFG. CO.
GRIMES,IOWA 50111 U.S.A.

CABLE ASSY/
CONN BRKT,
PRINTER

DWG. NO. 26050–002 | REV. C

CABLE ASSY/CONN BRKT,DSPL&SPKR

PART NO. 26050-000 REVISION D

ITEM	QTY.	UOM	PART NO.	DESCRIPTION
1	1	EA	13697-309	CONNECTOR/RCPT,9CKT,.062
2	9	EA	13697-297	CONNECTOR/SOCKET,FEMALE,.062
3	1	EA	13697-292	CONNECTOR/HSG,STD PC,4PIN,MALE
4	4	EA	10288-000	CONNECTOR/PIN,20-14GA,.130
5	1	FT	10279-292	WIRE/STRANDED,18GA,300V,YELLOW
6	2	FT	10279-290	WIRE/STRANDED,18GA,300V,BLACK
7	1	FT	10279-291	WIRE/STRANDED,18GA,300V,RED
8	1	EA	13697-089	CONNECTOR HOUSING/9 PIN D-SUBF
9	3	EA	13697-096	CONNECTOR SOCKET/CRP,D SUBMIN
10	1	EA	13697-049	CONNECTOR CLAMP/9 PIN D-SUB
11	1	EA	13697-020	CONNECTOR RETAINER/MALE SCREW
12	2	FT	15709-001	CABLE/SHIELDED,22/4
13	0	FT	15107-000	TUBING/HEAT SHRINK,1/4" OD
14	10	FT	17276-004	WIRE/STRD,INTL,0.75SQMM DK BLU

DWG. NO. 26050-000

WIRING CHART

FROM	TO	USING	WIRE #	LENGTH
ITEM #1-P1	ITEM #3-P1	ITEM #5 YELLOW	726	12"
ITEM #1-P2	ITEM #3-P2	ITEM #6 BLACK	725	12"
ITEM #1-P3	ITEM #3-P3	ITEM #6 BLACK	725	12"
ITEM #1-P4	ITEM #3-P4	ITEM #7 RED	724	12"
ITEM #1-P5	N/C	ITEM #14 DK BLUE	736	50"
ITEM #1-P6	N/C	ITEM #14 DK BLUE	737	50"
ITEM #1-P7	ITEM #8-P2	ITEM #12 RED	751	18"
ITEM #1-P8	ITEM #8-P3	ITEM #12 GREEN	752	18"
ITEM #1-P9	ITEM #8-P5	ITEM #12 BLACK	753	18"
CUT OFF	CUT OFF	ITEM #12 WHITE		
CUT OFF	CUT OFF	ITEM #12 SHIELD		

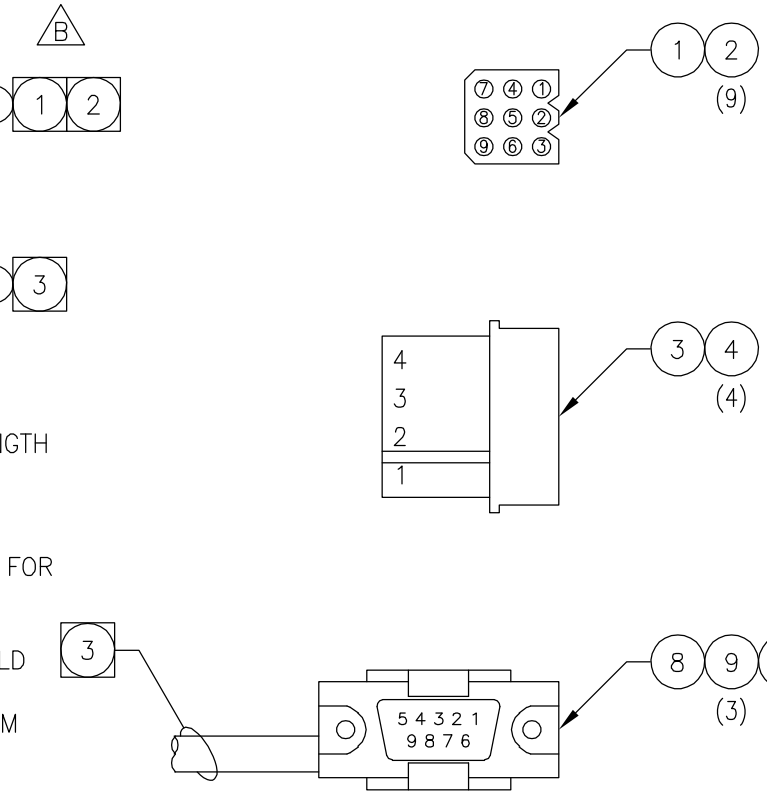

NOTES:

1. TWIST WIRES A MINIMUM OF 3 TURNS PER INCH. THE LENGTH SHOWN ARE CUT LENGTHS FOR WIRE BEFORE TWISTING.
2. THESE WIRES DO NOT GO TO A CONNECTOR ON THIS ASSEMBLY. LABEL THE ENDS OF THE WIRES WITH WIRE # FOR EASE OF FUTURE CONNECTION.
3. ON THE CABLE (ITEM #12) CUT THE WHITE WIRE AND SHIELD EVEN WITH THE INSULATION ON BOTH ENDS OF THE CABLE. APPLY 1" OF HEAT SHRINK TUBING (ITEM #13) TO THE ITEM #1 SIDE OF THE CABLE TO COVER THE CUT WIRES.
4. CABLE EXITS CONNECTOR HOUSING ON THE SIDE AS SHOWN. USE STRAIN RELIEF PROVIDED WITH CONNECTOR HOUSING (ITEM #8) THAT APPLIES ADEQUATE PRESSURE TO HOLD CABLE. USE STRAIN RELIEF PLUG, TO PLUG UNUSED HOLE IN CONNECTOR HOUSING.

A

LTR	ECO	DESCRIPTION	BY	DATE	APVD
D	0206-006	REV WIRE LENGTH ITEM #14	MB	2/6/06	RB
C	0904-098	REPLACED WIRE (ITEM 5, 6, & 7)	MB	9/27/04	RB
B	0404-070	DEL 2 NOTE 1 CALLOUTS	AM	4/14/04	RB
A	0304-060	ADDED NOTE #4	MB	3/18/04	RB
–	0104-102	RELEASING DRAWING	MB	2/2/04	RB

PRODUCT: AMTT CS

TOLERANCES UNLESS OTHERWISE SPECIFIED

1. ALL SPECIFICATIONS SUBJECT TO CHANGE WITHOUT NOTICE.
2. UNLESS OTHERWISE SPECIFIED, ALL DIMENSIONS ARE IN INCHES.

MATERIAL: SEE PRODUCT STRUCTURE

SCALE: NONE | DATE: 1/26/04
DRAWN: BEERENDS | CHK'D: DC/MB/RB
APVD: RB | DATE: 2/2/04

RYKO® MFG. CO.
GRIMES,IOWA 50111 U.S.A.

CABLE ASSY/ CONN BRKT, DSPL&SPKR

DWG. NO. 26050-000 | REV. D

FORM #19477-036 REV A 01/18/96

CABLE ASSY/CONN BRKT,BACKLIGHT

PART NO. 26050-003 REVISION D

ITEM	QTY.	UOM	PART NO.	DESCRIPTION
1	1	EA	13697-308	CONNECTOR/RCPT,6CKT,.062
2	4	EA	13697-297	CONNECTOR/SOCKET,FEMALE,.062
3	1	EA	13697-292	CONNECTOR/HSG,STD PC,4PIN,MALE
4	4	EA	10288-000	CONNECTOR/PIN,20-14GA,.130
5	1	FT	10279-292	WIRE/STRANDED,18GA,300V,YELLOW
6	2	FT	10279-290	WIRE/STRANDED,18GA,300V,BLACK
7	1	FT	10279-291	WIRE/STRANDED,18GA,300V,RED

DWG. NO. 26050–003

WIRING CHART

FROM	TO	USING	WIRE #	LENGTH
ITEM #1–P2	ITEM #3–P2	ITEM #6 BLACK	725	12"
ITEM #1–P3	ITEM #3–P1	ITEM #5 YELLOW	726	12"
ITEM #1–P5	ITEM #3–P3	ITEM #6 BLACK	725	12"
ITEM #1–P6	ITEM #3–P4	ITEM #7 RED	724	12"

B D

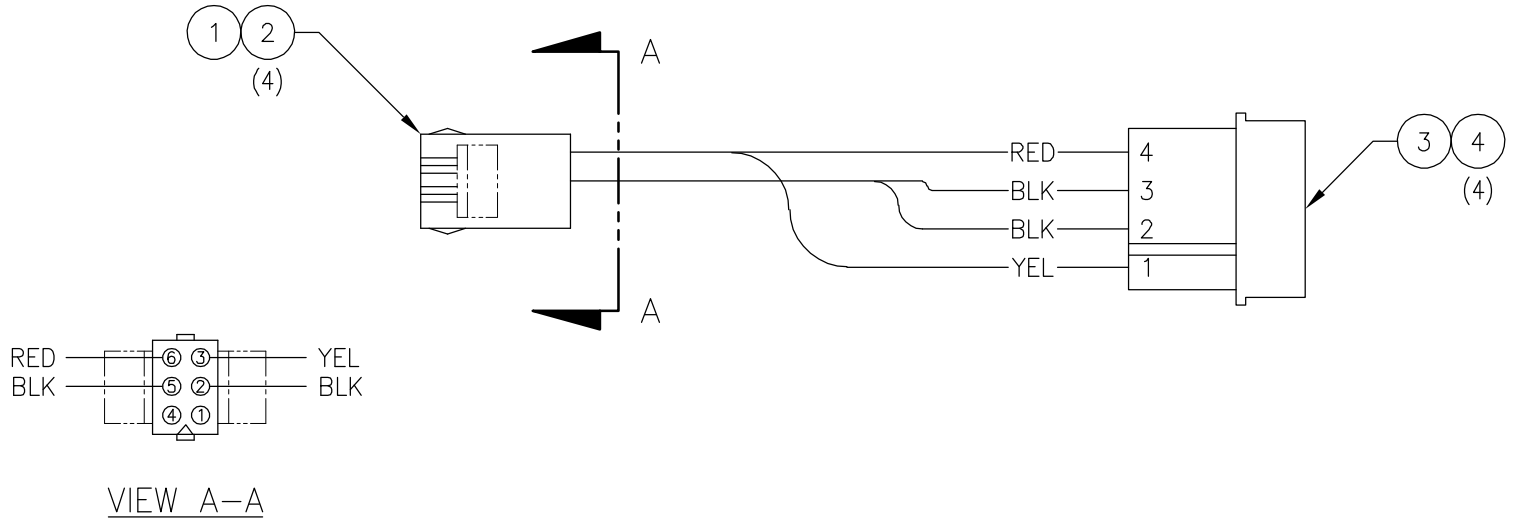

VIEW A–A

LTR	ECO	DESCRIPTION	BY	DATE	APVD
D	0805–063	ADD WIRES #724 & 725	MB	8/30/05	RB
C	0604–097	REPLACED WIRE (ITEMS #5 & #6)	MB	6/29/04	RB
B	0404–070	DEL NOTE 1	AM	4/14/04	RB
A	0304–060	REPLACED P.S. ITEM #1, #5 & #6	MB	3/18/04	RB
–	0104–102	RELEASING DRAWING	MB	2/2/04	RB

PRODUCT: AMTT CS

TOLERANCES UNLESS OTHERWISE SPECIFIED

1. ALL SPECIFICATIONS SUBJECT TO CHANGE WITHOUT NOTICE.
2. UNLESS OTHERWISE SPECIFIED, ALL DIMENSIONS ARE IN INCHES.

MATERIAL: SEE PRODUCT STRUCTURE

SCALE: NONE | DATE: 1/26/04
DRAWN: BEERENDS | CHK'D: DC/MB/RB
APVD: RB | DATE: 2/2/04

RYKO® MFG. CO.
GRIMES,IOWA 50111 U.S.A.

CABLE ASSY/
CONN BRKT,
BACKLIGHT

DWG. NO. 26050–003 | REV. D

FORM #19477–036 REV A 01/18/96

CABLE ASSY/CONN BRKT,CARD MECH

PART NO. 26050-001 REVISION D

ITEM	QTY.	UOM	PART NO.	DESCRIPTION
1	1	EA	13697-307	CONNECTOR/RCPT,4CKT,.062,MAT
2	4	EA	13697-297	CONNECTOR/SOCKET,FEMALE,.062
3	1	EA	13697-292	CONNECTOR/HSG,STD PC,4PIN,MALE
4	4	EA	10288-000	CONNECTOR/PIN,20-14GA,.130
5	6	FT	10279-292	WIRE/STRANDED,18GA,300V,YELLOW
6	1	FT	10279-290	WIRE/STRANDED,18GA,300V,BLACK
8	1	EA	13697-089	CONNECTOR HOUSING/9 PIN D-SUBF
9	3	EA	13697-096	CONNECTOR SOCKET/CRP,D SUBMIN
10	1	EA	13697-049	CONNECTOR CLAMP/9 PIN D-SUB
11	1	EA	13697-020	CONNECTOR RETAINER/MALE SCREW
12	1	FT	15709-001	CABLE/SHIELDED,22/4
13	0	FT	15107-000	TUBING/HEAT SHRINK,1/4" OD
14	1	EA	25883-004	LABEL/SCI CARD READER OPT ONLY

DWG. NO. 26050–001

WIRING CHART

FROM	TO	USING	WIRE #	LENGTH
ITEM #1–P1	NO CONNECTION	ITEM #5 YELLOW	766	34" (1)
ITEM #1–P2	ITEM #3–P2	ITEM #6 BLACK	725	12" (2)
	ITEM #8–P5	ITEM #12 BLACK	725	16" (2)
ITEM #1–P3	ITEM #8–P2	ITEM #12 WHITE	754	16"
ITEM #1–P4	ITEM #8–P3	ITEM #12 GREEN	755	16"
CUT OFF	CUT OFF	ITEM #12 RED		(3)
CUT OFF	CUT OFF	ITEM #12 SHIELD		(3)
ITEM #3–P1	NO CONNECTION	ITEM #5 YELLOW	726	32" (1)

△B △C △D

△C △D

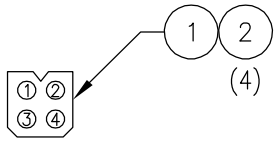

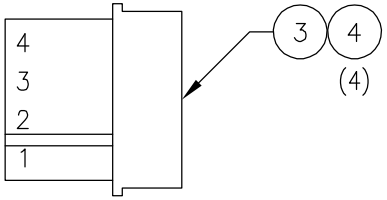

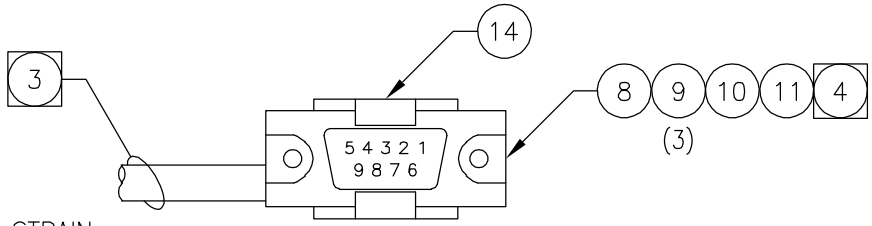

NOTES: △B △C

(1) THESE WIRES DO NOT GO TO A CONNECTOR ON THIS ASSEMBLY. LABEL THE ENDS OF THE WIRES WITH WIRE # FOR EASE OF FUTURE CONNECTION.

(2) SOLDER AND CRIMP BOTH WIRES TO PIN #2 AND INSERT PIN INTO CONNECTOR.

(3) ON THE CABLE (ITEM #12) CUT THE RED WIRE AND SHIELD EVEN WITH THE INSULATION ON BOTH ENDS OF THE CABLE. APPLY 1" OF HEAT SHRINK TUBING (ITEM #13) TO THE ITEM #1 SIDE OF THE CABLE TO COVER THE CUT WIRES.

(4) CABLE EXITS CONNECTOR HOUSING ON THE SIDE AS SHOWN. USE STRAIN RELIEF PROVIDED WITH CONNECTOR HOUSING (ITEM #8) THAT APPLIES ADEQUATE PRESSURE TO HOLD CABLE. USE STRAIN RELIEF PLUG, TO PLUG UNUSED HOLE IN CONNECTOR HOUSING.

△A

LTR	ECO	DESCRIPTION	BY	DATE	APVD
D	0206–006	REV WIRE LENGTH ITEM #5	MB	2/6/06	RB
C	0904–098	ADDED WIRING FOR RELAY "K2"	MB	9/27/04	RB
B	0404–070	DEL NOTE 1	AM	4/14/04	RB
A	0304–060	ADDED NOTE #4	MB	3/18/04	RB
–	0104–102	RELEASING DRAWING	MB	2/2/04	RB

PRODUCT: AMTT CS

TOLERANCES UNLESS OTHERWISE SPECIFIED

1. ALL SPECIFICATIONS SUBJECT TO CHANGE WITHOUT NOTICE.
2. UNLESS OTHERWISE SPECIFIED, ALL DIMENSIONS ARE IN INCHES.

MATERIAL: SEE PRODUCT STRUCTURE

SCALE	DATE
NONE	1/26/04
DRAWN	CHK'D
BEERENDS	DC/MB/RB
APVD	DATE
RB	2/2/04

RYKO® MFG. CO.
GRIMES,IOWA 50111 U.S.A.

CABLE ASSY/ CONN BRKT, CARD MECH

DWG. NO. 26050–001 REV. D

FORM #19477–036 REV A 01/18/96

Parts Listing for Work Order 7960050 **P-100**

CABLE ASSY/ATX TO COMMON

PART NO. 26050-006 REVISION -

ITEM	QTY.	UOM	PART NO.	DESCRIPTION
1	1	EA	13697-292	CONNECTOR/HSG,STD PC,4PIN,MALE
2	2	EA	10288-000	CONNECTOR/PIN,20-14GA,.130
3	7	FT	10279-290	WIRE/STRANDED,18GA,300V,BLACK

DWG. NO. 26050–006

NOTE:

(1) THE LENGTH SHOWN IS TWISTED LENGTH OF WIRE. LABEL THE ENDS OF THE WIRES WITH WIRE # FOR EASE OF FUTURE CONNECTION.

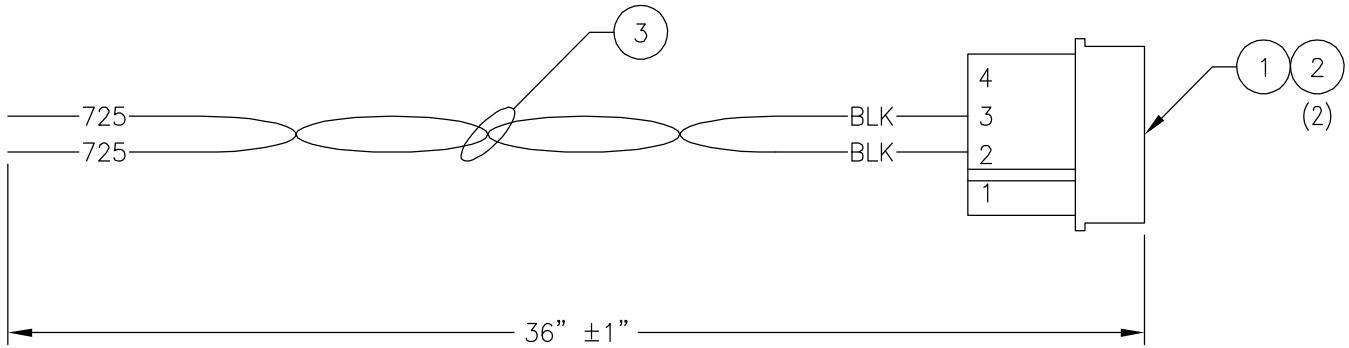

LTR	ECO	DESCRIPTION	BY	DATE	APVD
–	1105–125	RELEASING DRAWING	MB	11/30/05	RB

PRODUCT: AMTT CS

TOLERANCES UNLESS OTHERWISE SPECIFIED

1. ALL SPECIFICATIONS SUBJECT TO CHANGE WITHOUT NOTICE.
2. UNLESS OTHERWISE SPECIFIED, ALL DIMENSIONS ARE IN INCHES.

MATERIAL: SEE PRODUCT STRUCTURE

SCALE: NONE | DATE: 11/30/05

DRAWN: BEERENDS | CHK'D: TB/SM

APVD: RB | DATE: 11/30/05

RYKO® MFG. CO.
GRIMES,IOWA 50111 U.S.A.

CABLE ASSY/
ATX TO COMMON

DWG. NO. 26050–006 | REV. –

FORM #19477–036 REV A 01/18/96

Parts Listing for Work Order 7960050 **P-102**

PATCH CORD/STEREO,3.5MM,3.5MM

PART NO. 24517-001 REVISION -

ITEM	QTY.	UOM	PART NO.	DESCRIPTION
1	1	EA	24517-000	PATCH CORD/STEREO,3.5MM PLUG
2	1	EA	13697-256	CONNECTOR/3.5MM STEREO PLUG

NOTE:

1. CONNECT TIP TO WHITE WIRE, RING TO RED WIRE, AND SLEEVE TO SHIELD DRAIN WIRE.

DWG. NO. 24517–001

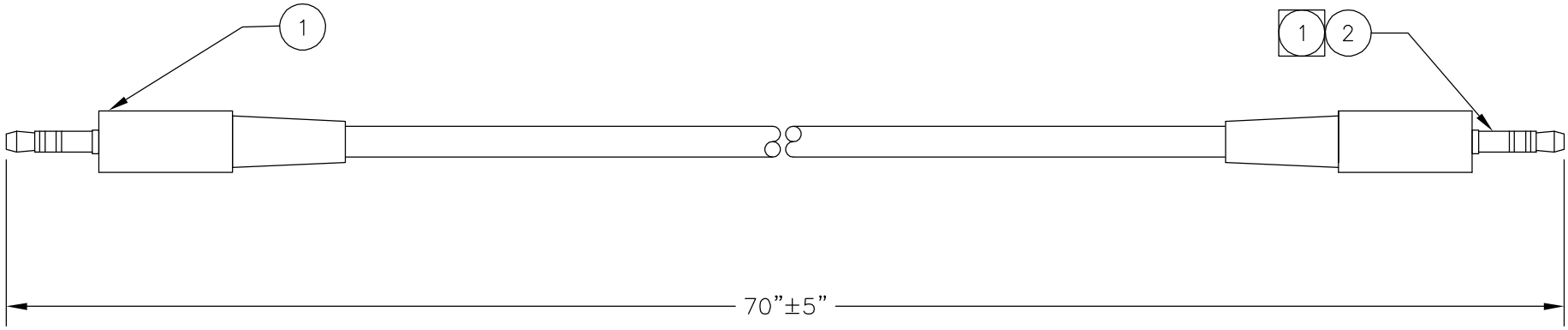

LTR	ECO	DESCRIPTION	BY	DATE	APVD
–	0501–175	RELEASING DRAWING	LS	5/29/01	RB

PRODUCT: MM32

PROGRAMMER:

TOLERANCES UNLESS OTHERWISE SPECIFIED

1. ALL SPECIFICATIONS SUBJECT TO CHANGE WITHOUT NOTICE.
2. UNLESS OTHERWISE SPECIFIED, ALL DIMENSIONS ARE IN INCHES.

MATERIAL: SEE PRODUCT STRUCTURE

SCALE: NONE | DATE: 5/25/01

DRAWN: LS | CHK'D: RM/DC

APVD: RB | DATE: 5/29/01

RYKO® MFG. CO.
GRIMES,IOWA 50111 U.S.A.

PATCH CORD/ STEREO,3.5MM,3.5MM

DWG. NO. 24517–001 | REV. –

FORM #19477–036 REV A 01/18/96

MOUNT/ENVIRONMENT SENSOR

PART NO. 26405-000 REVISION A

ITEM	QTY.	UOM	PART NO.	DESCRIPTION
1	0	EA	12091-000	PLATE/AL 3003,.090"x60"x120"

DWG. NO. 26405–000

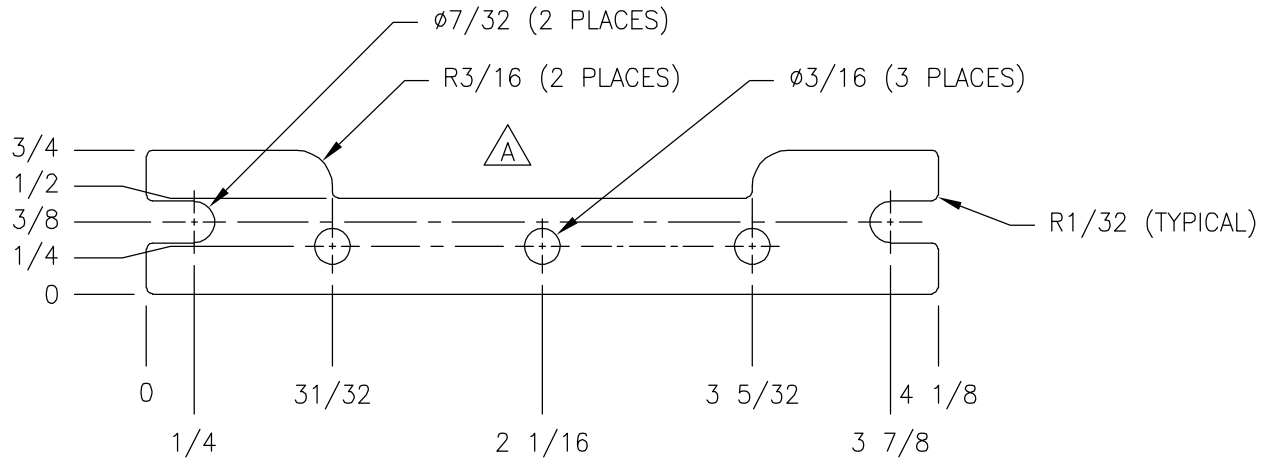

LTR	ECO	DESCRIPTION	BY	DATE	APVD
A	0405–122	ADDED NOTCH	MB	4/28/05	RB
–	0205–064	RELEASING DRAWING	MB	3/11/05	RB

PRODUCT
AMTT
AMTT CS
AMTT POS

TOLERANCES UNLESS OTHERWISE SPECIFIED
LOCATIONS: ±1/16
FRACTIONAL HOLES: ±1/16
RADII: ±1/16

1. ALL SPECIFICATIONS SUBJECT TO CHANGE WITHOUT NOTICE.
2. UNLESS OTHERWISE SPECIFIED, ALL DIMENSIONS ARE IN INCHES.

MATERIAL PLATE/AL 3003, .090"x60"120" 12091–000

SCALE NONE | DATE 2/18/05
DRAWN BEERENDS | CHK'D TB/SM
APVD RB | DATE 3/11/05

RYKO® MFG. CO.
GRIMES,IOWA 50111 U.S.A.

MOUNT/ ENVIRONMENT SENSOR

DWG. NO. 26405–000 | REV. A

FORM #19477–036 REV A 01/18/96

LCD SCREEN ASSY/HEATED,12.1"

PART NO. 27734-000 REVISION -

ITEM	QTY.	UOM	PART NO.	DESCRIPTION
1	1	EA	24983-031	LCD SCREEN/COLOR,12.1",V2
2	2	EA	27733-000	HEATER PLATE/LCD
3	2	EA	24025-010	RESISTOR/POWER,8.2 OHM,5W,AX
4	1	EA	14366-008	ADHESIVE/SILICON FILLED EPOXY
5	0	FT	14181-000	TUBING/HEAT SHRINK,3/16" OD
6	1	EA	27607-000	THERMOSTAT/40F CLOSE,60F OPEN
7	1	EA	27607-001	THERMOSTAT/50F CLOSE,23F OPEN
8	2	FT	10279-292	WIRE/STRANDED,18GA,300V,YELLOW
9	1	FT	10279-290	WIRE/STRANDED,18GA,300V,BLACK
10	1	EA	12032-203	TERMINAL/FLAG,SLIP,22-18GA,RED

NOTES:

1. ADHERE PART WITH ADHESIVE (ITEM 4).
2. CUTOFF RESISTOR LEADS TO 1/2" AND SOLDER TO WIRE. APPLY HEAT SHRINK TUBING (ITEM 5) OVER THE JOINT.
3. NOTE: INSURE THE PROPER THERMOSTAT IS ASSEMBLED IN THE PROPER POSITION. THE MOUNTING RING (WHICH IS NOT NECESSARY FOR THIS ASSEMBLY) MAY NOT BE INCLUDED WITH ALL OF THE THERMOSTATS AND SOME OF THE TERMINALS MAY NEED TO BE BENT UP.

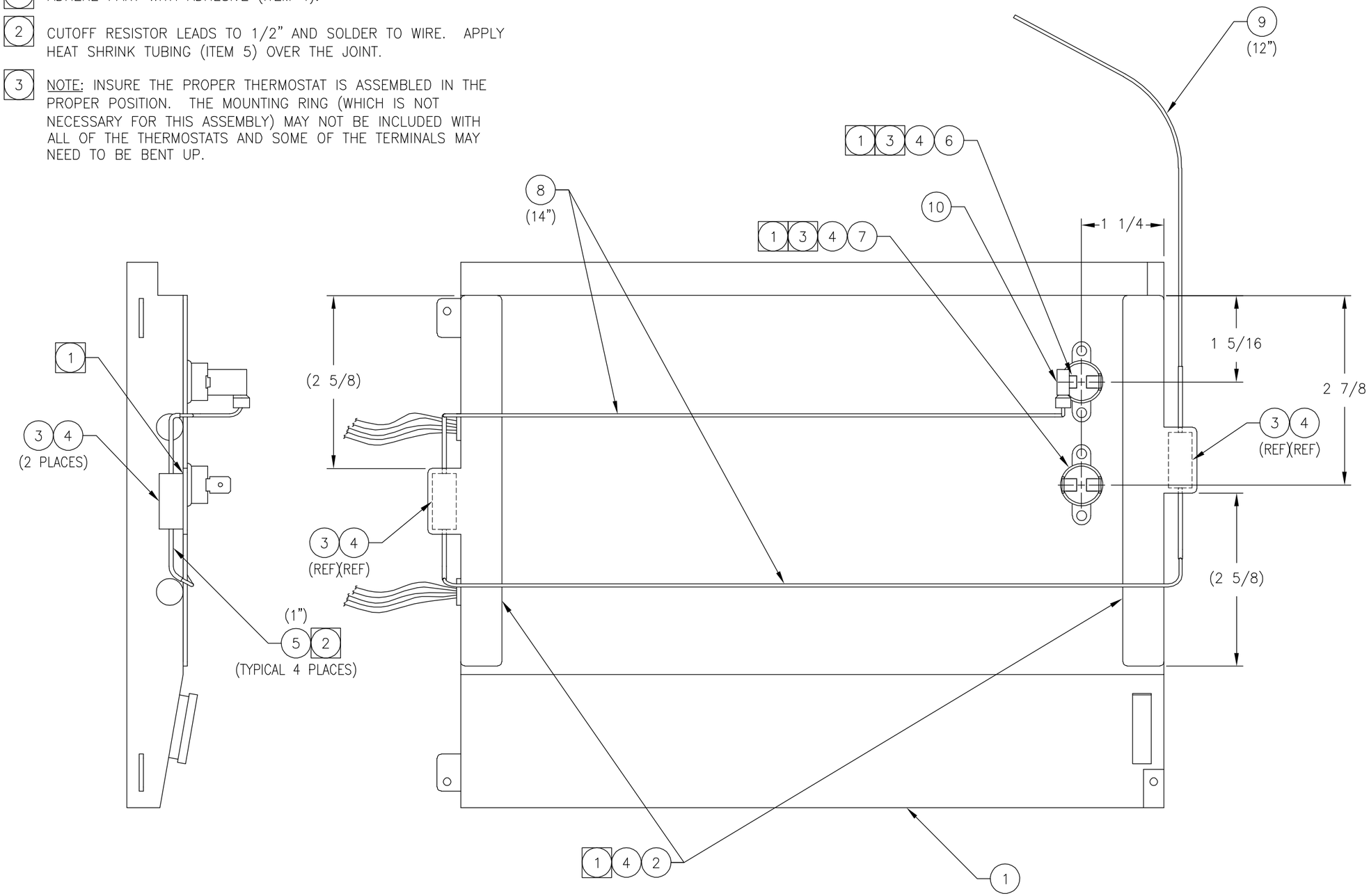

LTR	DESCRIPTION	BY	DATE	APVD
–	RELEASED DRAWING	WD	7/3/08	RB
–	0708–008			

FORM #19477–037 REV B 01/20/97

PRODUCT: AMTT CS

TOLERANCES UNLESS OTHERWISE SPECIFIED
LOCATIONS: ±1/16

1. ALL SPECIFICATIONS SUBJECT TO CHANGE WITHOUT NOTICE.
2. UNLESS OTHERWISE SPECIFIED, ALL DIMENSIONS ARE IN INCHES.

MATERIAL: SEE PRODUCT STRUCTURE

SCALE NONE	DATE 7/1/08	APVD	DATE 7/3/08
DRAWN WEDDLE	CHK'D RB	RB	

RYKO® MFG. CO. U.S.A.
GRIMES,IOWA 50111

LCD SCREEN ASSY/ HEATED,12.1"

REV. –
DWG. NO. 27734–000

CABLE ASSY/DOOR POWER

PART NO. 25914-016 REVISION A

ITEM	QTY.	UOM	PART NO.	DESCRIPTION
2	1	EA	13697-303	CONNECTOR/PLUG,9CKT,.062
3	9	EA	13697-296	CONNECTOR/PIN,MALE,24-18G,.062
4	2	EA	10495-201	TERMINAL/RCPT,SLIP,22-18G,RED
5	2	FT	10279-292	WIRE/STRANDED,18GA,300V,YELLOW
6	5	FT	10279-290	WIRE/STRANDED,18GA,300V,BLACK
7	1	EA	13697-378	CONNECTOR/RCPT,2 PIN,3MM MFJ
9	5	FT	17276-003	WIRE/STRD,INTL,0.75SQ MM,RED
10	2	EA	13697-304	CONNECTOR/RCPT,2CKT,.062
11	4	EA	13697-297	CONNECTOR/SOCKET,FEMALE,.062
12	2	FT	25609-002	WIRE/STRANDED,22GA,300V,YELLOW
13	2	FT	25609-006	WIRE/STRANDED,22GA,300V,BLACK
14	1	FT	14181-000	TUBING/HEAT SHRINK,3/16" OD
15	0	FT	15107-000	TUBING/HEAT SHRINK,1/4" OD
17	1	EA	13697-376	CONNECTOR/2MM HOUSING,8 PIN
18	5	EA	13697-377	CONNECTOR/SOCKET,28-24AWG
19	2	FT	14685-014	CABLE/5 CNDCT,24GA,STRD,SHIELD
20	2	EA	13697-379	CONNECTOR/SOCKET,20-24AWG

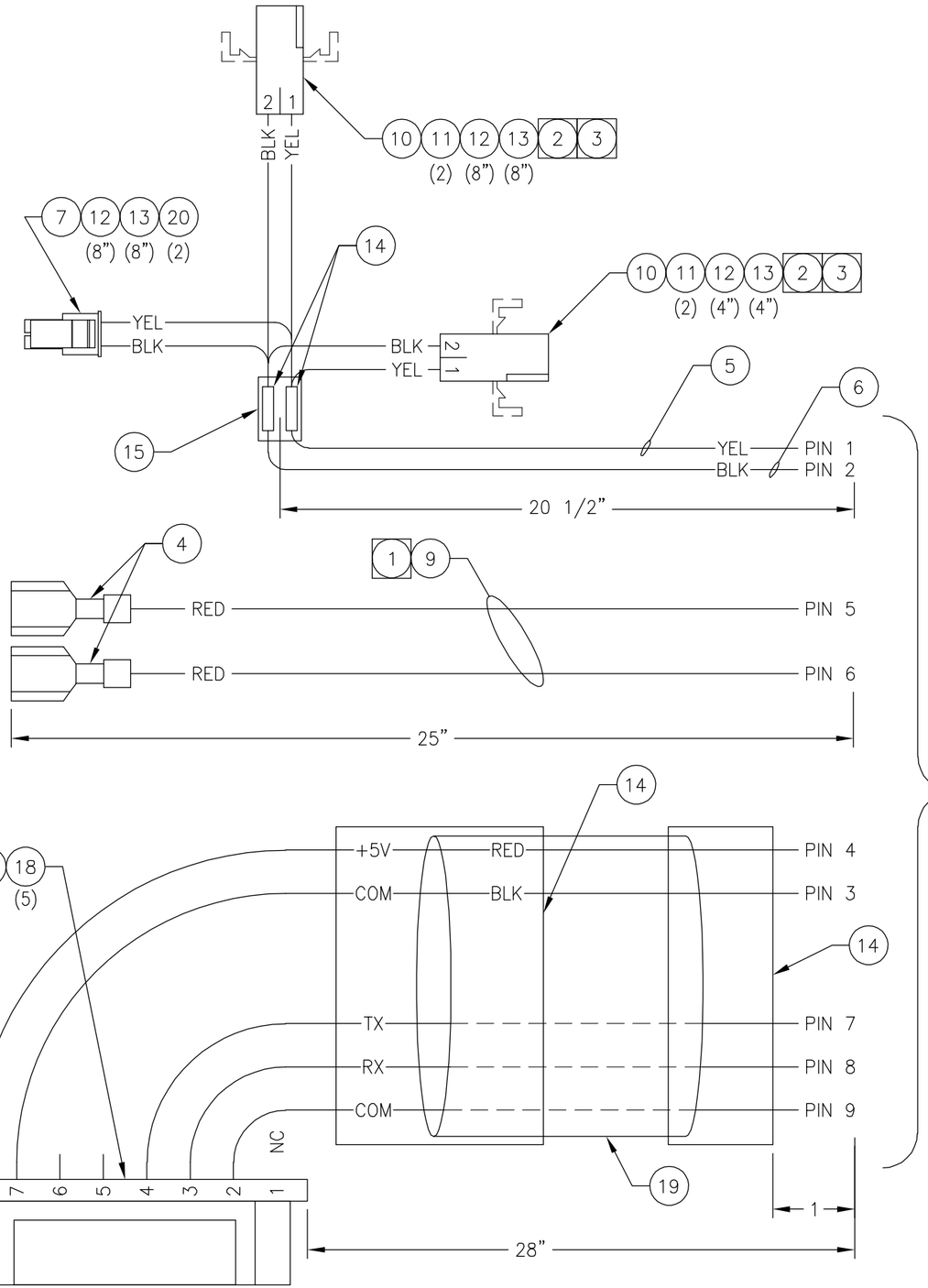

NOTES:

1. TWIST WIRES TOGETHER A MINIMUM OF 3 TURNS PER INCH. LENGTHS SHOWN ARE AFTER WIRES ARE TWISTED.
2. AFTER CRIMPING AND SOLDERING PINS ONTO EACH WIRE, INSERT THE WIRE INTO THE PROPER HOLE IN CONNECTOR.
3. CUT THE WINGS OFF THE CONNECTOR.

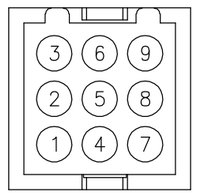

VIEW A–A
(ENLARGED FOR CLARITY)

LTR	ECO	DESCRIPTION	BY	DATE	APVD
A	0908–046	DEL ITEM #16 ON P/S	KS	9/12/08	RB
–	0408–142	RELEASED DRAWING	WD	5/14/08	RB

FORM #19477–037 REV B 01/20/97

PRODUCT
AMTT CS
TOUCH & GO

TOLERANCES
UNLESS OTHERWISE SPECIFIED
LOCATIONS: ±2

1. ALL SPECIFICATIONS SUBJECT TO CHANGE WITHOUT NOTICE.
2. UNLESS OTHERWISE SPECIFIED, ALL DIMENSIONS ARE IN INCHES.

MATERIAL
SEE PRODUCT STRUCTURE

SCALE NONE
DATE 4/29/08
DRAWN WEDDLE
CHK'D RB
APVD
DATE 5/14/08
RB

RYKO® MFG. CO.
GRIMES,IOWA 50111 U.S.A.

CABLE ASSY/
DOOR POWER

REV. A
DWG. NO. 25914–016

PC CARD/DIG I/O,ATOD,PCI,MOD

PART NO. 24993-013 REVISION -

ITEM	QTY.	UOM	PART NO.	DESCRIPTION
0	1	EA	EPH	FREE STOCK ITEM FOR BOM DRIVE
1	1	EA	24993-010	PC CARD/DIG I/O,ATOD,PCI
2	2	EA	10034-272	SCREW/MACH,2-56X1/4,FHMS,PHIL

DWG. NO. 24993–013

NOTE:

1. REMOVE THE EXISTING FASTENERS FROM THE PC CARD AND REPLACE THEM WITH FLAT HEAD SCREWS (ITEM #2).

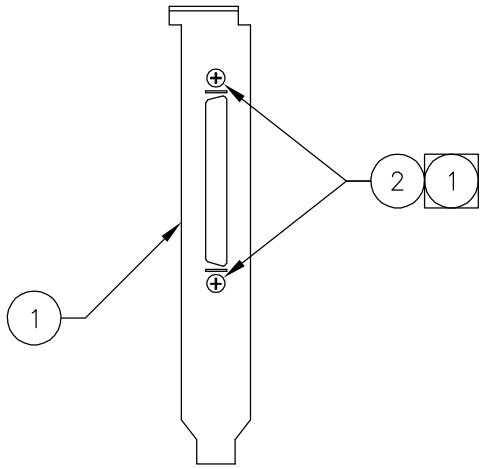

24993–813 PC CARD/DIG I/O,ATOD,PCI,MOD
24993–013 PC CARD/DIG I/O,ATOD,PCI,MOD

LTR	ECO	DESCRIPTION	BY	DATE	APVD
–	0304–010	RELEASING DRAWING	MB	3/9/04	RB

PRODUCT: AMTT CS

TOLERANCES UNLESS OTHERWISE SPECIFIED

1. ALL SPECIFICATIONS SUBJECT TO CHANGE WITHOUT NOTICE.
2. UNLESS OTHERWISE SPECIFIED, ALL DIMENSIONS ARE IN INCHES.

MATERIAL: SEE PRODUCT STRUCTURE

SCALE: NONE | DATE: 3/3/04
DRAWN: BEERENDS | CHK'D: KC/SM
APVD: RB | DATE: 3/9/04

RYKO® MFG. CO.
GRIMES,IOWA 50111 U.S.A.

PC CARD/ DIG I/O,ATOD,PCI, MOD

DWG. NO. 24993–013 | REV. –

FORM #19477–036 REV A 01/18/96

Parts Listing for Work Order 7960050 **P-112**

CABLE ASSY/ATX EXTENSION,10"

PART NO. 26050-005 REVISION -

ITEM	QTY.	UOM	PART NO.	DESCRIPTION
1	1	EA	13697-345	CONNECTOR/HSG,ATX,20PIN,MALE
2	20	EA	13697-346	CONNECTOR/PINS,18-24AWG
3	1	EA	13697-362	CONNECTOR/HSG,20 PIN,FEM
4	19	EA	13697-195	CONNECTOR/PIN,FEMALE,18-24 AWG
5	0	FT	25609-008	WIRE/STRANDED,24GA,300V,BLACK
6	16	FT	10279-290	WIRE/STRANDED,18GA,300V,BLACK
7	4	EA	10005-201	WIRE TIE/4",5/8"MAX DIA
10	1	EA	01274-000	TEST PROC/ATX EXTENSION CABLE

DWG. NO. 26050–005

NOTES:

1. CONNECT WIRES PIN 1 TO PIN 1, AND SO ON, WITH EXCEPTION OF PIN #13 & #14.
2. NO CONNECTION TO PIN #14.
3. SOLDER ALL CRIMPS.
4. CRIMP 24 AWG WIRE (ITEM #5) AND 18 AWG WIRE (ITEM #6) INTO SAME PIN (ITEM #2) AND PLACE INTO PIN #13. CRIMP PIN (ITEM #2) TO 24 AWG WIRE (ITEM #5) AND INSERT INTO PIN #14 AS SHOWN. CRIMP PIN (ITEM #4) TO OTHER END OF 18 AWG WIRE (ITEM #6) AND PLACE INTO PIN #13 OF OPPOSITE CONNECTOR (ITEM #3).
5. WIRE TIE AS NEEDED FOR A NEAT AND PROFESSIONAL APPEARANCE.

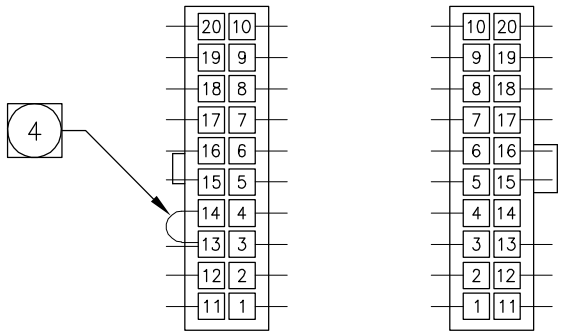

VIEW A–A VIEW B–B

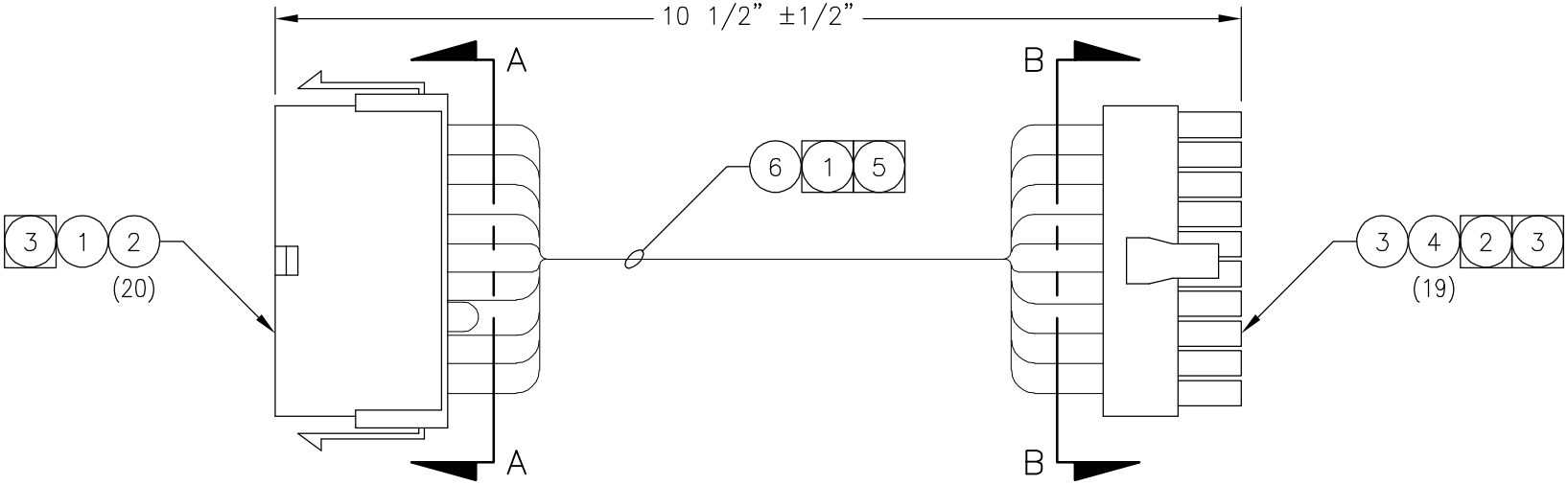

LTR	ECO	DESCRIPTION	BY	DATE	APVD
–	1105–116	RELEASING DRAWING	MB	11/28/05	RB

PRODUCT: AMTT CS

TOLERANCES UNLESS OTHERWISE SPECIFIED

1. ALL SPECIFICATIONS SUBJECT TO CHANGE WITHOUT NOTICE.
2. UNLESS OTHERWISE SPECIFIED, ALL DIMENSIONS ARE IN INCHES.

MATERIAL: SEE PRODUCT STRUCTURE

SCALE: NONE | DATE: 11/28/05
DRAWN: BEERENDS | CHK'D: KC/SM
APVD: RB | DATE: 11/28/05

RYKO® MFG. CO.
GRIMES,IOWA 50111 U.S.A.

CABLE ASSY/ ATX EXTENSION, 10"

DWG. NO. 26050–005 REV. –

FORM #19477–036 REV A 01/18/96

PCB ASSY/DIODE POWER SUPPLY

PART NO. 14978-003 REVISION -

ITEM	QTY.	UOM	PART NO.	DESCRIPTION
1	1	EA	11180-211	CAPACITOR/MONO,0.1UF,50VDC
2	2	EA	11182-215	RESISTOR/470 OHM,1/4W,CF
3	1	EA	11181-229	CAPACITOR/ELECTLT,470UF,50V,RD
4	7	EA	11175-218	DIODE/6 AMP,200V
5	1	EA	13697-142	CONNECTOR/4 PIN,PC MOUNT
6	1	EA	16490-007	FUSE/POLYMER,6AMP,30V
7	1	EA	13697-136	CONNECTOR/SOCKET,4PIN,HORIZ
8	1	EA	13697-137	CONNECTOR/PLUG,4PIN,SCREW CLMP
9	1	EA	11189-096	PC BOARD/DIODE POWER SUPPLY
10	0	FT	10279-280	WIRE/STRANDED,18GA,BLACK
11	1	EA	23639-000	LABEL/ESD SENSITIVE,1.5"X.375"
12	1	EA	01101-003	TEST PROC/POWER SUPPLY,DC2DC
13	1	EA	15021-003	ELEC SCHEM/DIODE POWER SUPPLY

DWG. NO. 14978–003

NOTE:

(1) USE WIRE (ITEM #10) TO JUMPER D8, D9, AND D10.

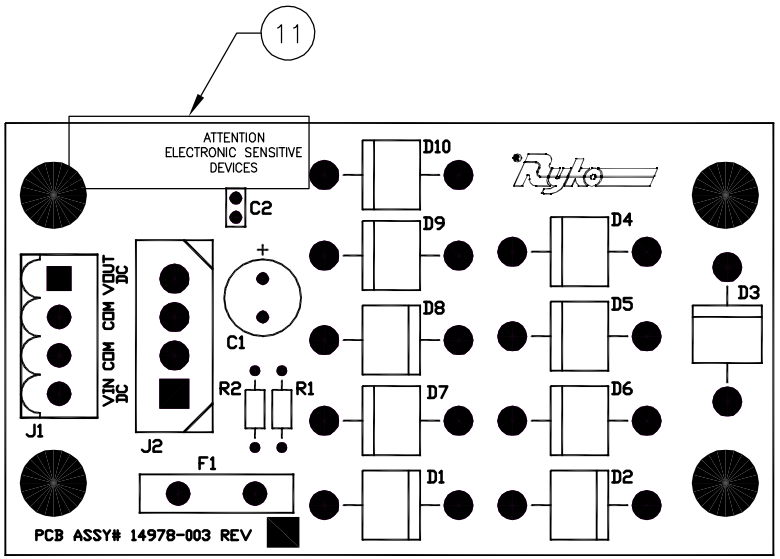

PART IDENTIFICATION TABLE

ITEM	QTY	PART #	DESCRIPTION	REF DESIG.
1	1	11180–211	CAPACITOR/MONO,0.1UF,50VDC	C2
2	2	11182–215	RESISTOR/470 OHM,1/4W,CF	R1, R2
3	1	11181–229	CAPACITOR/ELECTLT,470UF,50V,RD	C1
4	7	11175–218	DIODE/6 AMP,200V	D1,D2,D3,D4,D5,D6,D7
5	1	13697–142	CONNECTOR/4 PIN,PC MOUNT	J2
6	1	16490–007	FUSE/POLYMER,6AMP,30V	F1
7	1	13697–136	CONNECTOR/SOCKET,4PIN,HORIZ	J1
8	1	13697–137	CONNECTOR/PLUG,4PIN,SCREW CLMP	J1
9	1	11189–096	PC BOARD/DIODE POWER SUPPLY	
10	.25'	10279–280	WIRE/STRANDED,18GA,BLACK	D8,D9,D10
11	1	23639–000	LABEL/ESD SENSITIVE,1.5"X.375"	
12	0	01101–003	TEST PROC/POWER SUPPLY,DC2DC	
13	0	15021–003	ELEC SCHEM/DIODE POWER SUPPLY	

LTR	ECO	DESCRIPTION	BY	DATE	APVD
–	0404–154	RELEASING DRAWING	MB	5/3/04	RB

PRODUCT: AMTT CS

TOLERANCES UNLESS OTHERWISE SPECIFIED

1. ALL SPECIFICATIONS SUBJECT TO CHANGE WITHOUT NOTICE.
2. UNLESS OTHERWISE SPECIFIED, ALL DIMENSIONS ARE IN INCHES.

MATERIAL: SEE PRODUCT STRUCTURE

SCALE: NONE | DATE: 4/29/04
DRAWN: MB | CHK'D: AM/SM
APVD: RB | DATE: 5/3/04

RYKO® MFG. CO.
GRIMES,IOWA 50111 U.S.A.

PCB ASSY/
DIODE
POWER SUPPLY

DWG. NO. 14978–003 | REV. –

FORM #19477–036 REV A 01/18/96